HONEYBEE POOL RENOVATION

Approved: _____ 3/10/2023
Vanessa Garrett — Date
City Engineer

CITY OF ROHNERT PARK

1170 GOLF COURSE DRIVE, ROHNERT PARK CA 94928

GENERAL NOTES

1. THESE DRAWINGS DO NOT CONTAIN THE NECESSARY COMPONENTS FOR CONSTRUCTION SAFETY.

2. LOCATIONS OF ALL UTILITIES SHOWN ARE APPROXIMATE AND CONTRACTOR SHALL EXERCISE EXTREME CAUTION IN EXCAVATING AND TRENCHING ON THIS SITE TO AVOID INTERCEPTING EXISTING PIPING OR CONDUITS. IT SHALL BE THE RESPONSIBILITY OF THE CONTRACTOR TO LOCATE ALL EXISTING UTILITIES WHETHER SHOWN HEREON OR NOT AND TO PROTECT THEM FROM DAMAGE. THE ARCHITECT IS NOT RESPONSIBLE FOR THE LOCATION OF UNDERGROUND UTILITIES OR STRUCTURES WHETHER OR NOT SHOWN OR DETAILED AND INSTALLED BY ANY OTHER CONTRACT. THE CONTRACTOR SHALL IMMEDIATELY NOTIFY THE ARCHITECT SHOULD ANY UNIDENTIFIED CONDITIONS BE DISCOVERED. THE CONTRACTOR SHALL BEAR ALL EXPENSE OF REPAIR OR REPLACEMENT OF UTILITIES OR OTHER PROPERTY DAMAGED BY OPERATIONS IN CONJUNCTION WITH THE EXECUTION OF THIS WORK.

3. THESE DOCUMENTS AND THE IDEAS AND DESIGNS INCORPORATED HEREIN, AS AN INSTRUMENT OF PROFESSIONAL SERVICE, ARE THE PROPERTY OF WLC ARCHITECTS, INC., AND ARE NOT TO BE USED, IN WHOLE OR IN PART, FOR ANY OTHER PROJECT WITHOUT THE WRITTEN AUTHORIZATION OF WLC ARCHITECTS, INC.

4. THE WORK SHOWN ON THESE DRAWINGS AS EXISTING CONDITIONS WAS PREPARED FROM INFORMATION FURNISHED BY THE OWNER. WHILE THIS INFORMATION IS BELIEVED TO BE RELIABLE, WLC ARCHITECTS, INC. IS NOT RESPONSIBLE FOR THE ACCURACY OR ADEQUACY OF ANY WORK SHOWN AS EXISTING NOR IS WLC ARCHITECTS, INC. RESPONSIBLE FOR ANY ERRORS OR OMISSIONS WHICH MAY HAVE BEEN INCORPORATED INTO THESE DRAWINGS AS A RESULT.

5. EACH BIDDER SHALL POSSESS AT THE TIME OF BID A CLASS B OR THE APPROPRIATE CLASS C CONTRACTOR'S LICENSE PURSUANT TO PUBLIC CONTRACT CODE SECTION 3300 AND BUSINESS AND PROFESSIONS CODE SECTION 7028.15. THE SUCCESSFUL BIDDER MUST MAINTAIN THE LICENSE THROUGHOUT THE DURATION OF THIS CONTRACT.

6. FIRE SAFETY DURING CONSTRUCTION

   A. GENERAL: FIRE SAFETY DURING CONSTRUCTION SHALL COMPLY WITH CALIFORNIA FIRE CODE (CFC) CALIFORNIA CODE OF REGULATIONS (CCR) TITLE 24, PART 9, CHAPTER 5 AND CHAPTER 33.

   B. ACCESS ROADS: FIRE DEPARTMENT ACCESS ROADS SHALL BE ESTABLISHED AND MAINTAINED IN ACCORDANCE WITH CHAPTER 5, SECTION 501.4 AND CHAPTER 33, SECTION 3310.

   C. WATER SUPPLY: WATER MAINS AND HYDRANTS SHALL BE OPERATIONAL IN ACCORDANCE WITH CHAPTER 5, SECTION 501.4 AND CHAPTER 33,SECTION 3312.

   D. BUILDING ACCESS: ACCESS TO BUILDINGS FOR THE PURPOSE OF FIREFIGHTING SHALL BE PROVIDED. CONSTRUCTION MATERIAL SHALL NOT BLOCK ACCESS TO BUILDINGS, HYDRANTS OR FIRE APPLIANCES.

   E. ALTERATIONS OF BUILDINGS: SHALL COMPLY WITH APPLICABLE PROVISIONS OF CHAPTER 33.

   F. DEMOLITION OF BUILDINGS: SHALL COMPLY APPLICABLE PROVISIONS OF CHAPTER 33.

7. PENETRATIONS TO FIRE RATED MATERIALS OR ASSEMBLIES SHALL BE RESTORED TO EQUAL RATING. FIRE STOP SYSTEMS AS LISTED BY UNDERWRITERS LABORATORIES SHALL BE INSTALLED PER FIRE RESISTANCE DIRECTORY. FIRE STOP SYSTEMS SHALL BE AS SPECIFIED.

8. NONRESIDENTIAL ENERGY STANDARDS COMPLIANCE STATEMENT (TITLE 24, PART 6):

   THE DESIGN INDICATED HEREIN COMPLIES WITH THE REQUIREMENTS OF THE ENERGY CONSERVATION STANDARDS OF TITLE 24, PART 6, CALIFORNIA CODE OF REGULATIONS. THE PROPOSED BUILDING(S) WILL BE IN COMPLIANCE WITH THE ENERGY CONSERVATION STANDARDS PROVIDED IT (THEY) IS (ARE) BUILT ACCORDING TO THESE DRAWINGS AND SPECIFICATIONS AND PROVIDED ANY FUTURE IMPROVEMENTS ARE COMPLETED ACCORDING TO THE REQUIREMENTS OF TITLE 24, PART 6, CALIFORNIA CODE OF REGULATIONS. THESE PLANS AND SPECIFICATIONS HAVE BEEN PREPARED TO INCLUDE ALL SIGNIFICANT ENERGY CONSERVATION FEATURES REQUIRED FOR COMPLIANCE WITH THE STANDARDS. BUILDING AREAS THAT ARE UNCONDITIONED AND/OR NOT SUBJECT TO THE STANDARDS ARE INDICATED ON THE PLANS.

8. ENVELOPE MANDATORY MEASURES:

   A. INSTALLED INSULATING MATERIALS SHALL HAVE BEEN CERTIFIED BY THE MANUFACTURER TO COMPLY WITH THE CALIFORNIA QUALITY STANDARDS FOR INSULATING MATERIAL.

   B. ALL INSULATING MATERIALS SHALL BE INSTALLED IN COMPLIANCE WITH THE FLAME SPREAD RATING AND SMOKE DENSITY REQUIREMENTS OF TITLE 24, PART 2, CALIFORNIA CODE OF REGULATIONS, SECTIONS 720 AND 2603.

   C. ALL EXTERIOR JOINTS AND OPENINGS IN THE BUILDING ENVELOPE THAT ARE POTENTIAL AND OBSERVABLE SOURCES OF AIR LEAKAGE SHALL BE CAULKED, GASKETED, WEATHERSTRIPPED OR OTHERWISE SEALED.

   D. SITE CONSTRUCTED DOORS, WINDOWS, AND SKYLIGHTS SHALL BE CAULKED BETWEEN THE UNIT AND THE BUILDING, AND SHALL BE WEATHERSTRIPPED (EXCEPT FOR UNFRAMED GLASS DOORS AND FIRE DOORS).

   F. MANUFACTURED DOORS AND WINDOWS INSTALLED SHALL HAVE AIR INFILTRATION RATES CERTIFIED BY THE MANUFACTURER IN ACCORDANCE WITH TITLE 24, PART 6, CALIFORNIA CODE OF REGULATIONS, SECTION 110.6.

   G. DEMISING WALL INSULATION SHALL BE INSTALLED IN ALL OPAQUE PORTIONS OF FRAMED WALLS (EXCEPT DOORS).

10. ALL WORK SHOWN ON THESE DRAWINGS SHALL COMPLY WITH THE REQUIREMENTS OF CALIFORNIA BUILDING CODE (CBC).

11. CHANGES TO THE APPROVED DRAWINGS AND SPECIFICATIONS SHALL BE MADE BY AN ADDENDUM OR ARCHITECT SUPPLEMENTAL INSTRUCTION APPROVED BY THE CITY OF ROHNERT PARK BUILDING DEPARTMENT.

12. GRADING PLANS, DRAINAGE IMPROVEMENTS, ROAD AND ACCESS REQUIREMENTS AND ENVIROMENTAL HEALTH CONCIDERATIONS SHALL COMPLY WITH ALL LOCAL ORDINANCES.

13. DRINKING WATER SHALL COMPLY WITH ALL LOCAL HEALTH DEPARTMENT REQUIREMENTS.

14. THE INTENT OF THESE DRAWINGS AND SPECIFICATIONS IS THAT THE WORK OF THE ADDITION, ALTERATION OR RECONSTRUCTION IS IN COMPLIANCE WITH THE REQUIREMENTS OF CALIFORNIA BUILDING CODE. SHOULD ANY CONDITIONS SUCH AS DETERIORATION OR NON-COMPLYING CONSTRUCTION BE DISCOVERED WHICH IS NOT IDENTIFIED BY THE CONTRACT DOCUMENTS WHEREIN THE FINAL WORK WOULD NOT COMPLY WITH THE REQUIREMENTS OF CALIFORNIA BUILDING CODE, THE CONTRACTOR SHALL IMMEDIATELY NOTIFY THE OWNER AND THE ARCHITECT OF THE CONDITION IN WRITING. NECESSARY INFORMATION REQUIRED TO CORRECT THE CONDITIONS ENCOUNTERED WILL BE ISSUED BY THE ARCHITECT. A CHANGE ORDER MAY BE ISSUED TO ADJUST THE CONTRACT SUM OR TIME COMMENSURATE WITH THE AMOUNT OF ADDITIONAL WORK REQUIRED IF ANY. AN ARCHITECT'S SUPPLEMENTAL INSTRUCTION SHALL BE APPROVED BY THE CITY OF ROHNERT PARK BUILDING DEPARTMENT PRIOR TO PROCEEDING WITH THE WORK REQUIRED BY THE CHANGE ORDER.

15. ALL SLOPE AND CROSS SLOPE OF ACCESSIBLE ROUTE PAVING INDICATED ON THESE DRAWINGS WAS DESIGNED IN COMPLIANCE WITH THE 2010 ADA STANDARDS FOR ACCESSIBLE DESIGN AND THE ACCESSIBILITY STANDARDS OF THE CALIFORNIA BUILDING CODE, (CBC) TITLE 24,PART 2, CHAPTER 11B OF THE CALIFORNIA CODE OF REGULATIONS (CCR). STRICT EXECUTION OF THE SLOPE AND CROSS SLOPE OF ACCESSIBLE ROUTE PAVING IS THE SOLE RESPONSIBILITY OF THE CONTRACTOR. SHOULD A CONDITION PRESENT ITSELF THAT WOULD RESULT IN AN INSTALLATION OTHER THAN WHAT IS INDICATED IN THESE DRAWINGS, WLC ARCHITECTS, INC. SHALL BE NOTIFIED IN WRITING AND A COMPLIANT RESOLUTION WILL BE FORMULATED.

16. CONTRACTOR TO OBTAIN PERMIT FOR INDUSTRIAL WASTE (SR), FEES & FILING OF APPLICATION ARE THE RESPONSIBILITIES BY THE CONTRACTOR.

17. ALL USA MARKINGS CREATED WITHIN PROJECT LIMITS SHALL BE REMOVED BY CONTRACTOR PRIOR TO NOTICE OF COMPLETION.

18. ALL MATERIALS, WORKMANSHIP, AND CONSTRUCTION SHALL CONFORM TO THE CURRENT CITY OF ROHNERT PARK DESIGN AND CONSTRUCTION STANDARDS AND CONSTRUCTION SPECIFICATION FOR PUBLIC IMPROVEMENTS.

19. ALL BACKFLOW ASSEMBLIES MUST BE LISTED ON THE LATEST REVISION OF THE APPROVED USC FOUNDATION FOR CROSS-CONNECTION AND HYDRAULIC RESEARCH LIST.

20. THE CONTRACTOR SHALL OBTAIN A DE-WATERING PERMIT FROM THE NORTH COAST REGIONAL WATER WATER CONTROL BOARD FOR DE-WATERING OPERATIONS THAT ARE USED TO MANAGE THE REMOVAL OF GROUND WATER FROM EXCAVATIONS AND THEIR DISCHARGE TO THE WATERS OF THE STATE OR THE STORM DRAIN SYSTEM. APPROVAL MUST BE OBTAINED FROM THE CITY OF SANTA ROSA ENVIRONMENTAL COMPLIANCE DIVISION PRIOR TO DISCHARGING GROUNDWATER TO THE SEWER.

21. TEMPORARY STOCKPILES MUST BE REMOVED BY COMPLETION OF GRADING ACTIVITIES UNLESS A SEPARATE TEMPORARY USE PERMIT AND GRADING PERMIT IS OBTAINED FOR THE STOCKPILE.

22. ALL UNDERGROUND IMPROVEMENTS INCLUDING SEWER LINES, WATER LINES, STORM DRAINS, PUBLIC UTILITY FACILITIES, AND SERVICES SHALL BE INSTALLED, TESTED, AND ACCEPTED BY THE UTILITIES AND PUBLIC WORKS DEPARTMENT PRIOR TO PAVING. TRENCH PAVING FOR ALL UTILITIES SHALL BE COORDINATED AND INSTALLED AT THE SAME TIME.

23. RECORD DRAWINGS SHALL BE PROVIDED TO THE CITY UPON COMPLETION OF PROJECT AND PRIOR TO FINAL ACCEPTANCE.

24. THE CONTRACTOR SHALL KEEP THE WORK SITE, STAGING AREAS AND OTHER AREAS USED BY IT IN A NEAT AND CLEAN CONDITION, AND FREE FROM ANY ACCUMULATION OF TRASH. THE CONTRACTOR SHALL DISPOSE OF ALL TRASH, RUBBISH, AND WASTE MATERIALS OF ANY KIND GENERATED BY THE CONTRACTOR, SUBCONTRACTOR OR ANY COMPANY HIRED BY THE CONTRACTOR ON A DAILY BASIS. THE CONTRACTOR SHALL ALSO KEEP HAUL ROADS FREE FROM DIRT, RUBBISH, AND UNNECESSARY OBSTRUCTIONS RESULTING FROM SITE OPERATION. DISPOSAL OF ALL TRASH, RUBBISH, AND DEBRIS MATERIALS SHALL BE IN A COVERED WASTE RECEPTACLE OR HAULED OFF SITE, IN ACCORDANCE WITH LOCAL CODES AND ORDINANCES GOVERNING LOCATIONS AND DISPOSAL, AND IN CONFORMANCE WITH APPLICABLE LAWS AND REGULATIONS. WASTE RECEPTACLES SHALL BE COVERED AT THE END OF EVERY DAY AND DURING RAIN EVENTS.

25. THE CONTRACTOR SHALL IMPLEMENT AND MAINTAIN ALL APPLICABLE BMPS LISTED IN THE EROSION CONTROL AND/ OR STORM WATER POLLUTION PREVENTION PLAN.

26. CONTRACTOR IS RESPONSIBLE FOR PRESERVATION AND/OR PERPETUATION OF ALL EXISTING SURVEY MONUMENTS (CURB TAGS, IRON PIPES, CENTERLINE WELL DISKS, ETC.). IF THE CONTRACTOR SUSPECTS THAT WORK WILL BE CONDUCTED IN AN AREA WHICH MAY RESULT IN THE DISTURBANCE OF SURVEY MONUMENTS, THE CONTRACTOR SHALL RETAIN THE SERVICES OF A LICENSED PROFESSIONAL AUTHORIZED TO PRACTICE LAND SURVEYING TO LOCATE SAID MONUMENTS PRIOR TO DISTURBANCE. RE-ESTABLISH MONUMENTS WHICH HAVE BEEN DISTURBED AS A RESULT OF CONSTRUCTION AND FILE THE APPROPRIATE DOCUMENTATION WITH THE COUNTY ONCE THE MONUMENTS ARE REST. THE CONTRACTOR SHALL PROVIDE THE CITY WITH A MONUMENT CERTIFICATION LETTER FROM THE ENGINEER/SURVEYORS STATING THAT THE EXISTING MONUMENTS HAVE BEEN IDENTIFIED AND LOCATED PRIOR TO REMOVAL.

27. CONSTRUCTION HOURS SHALL BE LIMITED FROM 8 AM TO 6 PM MONDAY THROUGH FRIDAY, EXCLUDING HOLIDAYS. THIS RESTRICTIONS INCLUDES THE START UP OF ANY MOTORIZED EQUIPMENT. ALL CONTRACTOR' EQUIPMENT SHALL BE PROPERLY MUFFLED AND SHALL BE SHUT DOWN WHEN NOT IN USE.

28. A NOTICE OF INTENT TO COMPLY WITH THE TERMS OF THE GENERAL PERMIT TO DISCHARGE STORM WATER ASSOCIATED WITH CONSTRUCTION ACTIVITY MUST BE FILED WITH THE NORTH COAST REGIONAL WATER QUALITY CONTROL BOARD PRIOR TO THE ISSUANCE OF ANY GRADING PERMIT (CALL (707)576-2220 FOR INFORMATION).

29. DUST CONTROL SHALL BE PROVIDED BY CONTRACTOR DURING ALL PHASES OF CONSTRUCTION.

30. DRAINAGE FROM UPSTREAM PROPERTIES SHALL NOT BE BLOCKED BY GRADING OR CONSTRUCTION OF IMPROVEMENTS.

31. DEVELOPMENT MUST CONFORM TO 40 CFR (CODE OF FEDERAL REGULATIONS) PARTS 122, 123, AND 124 NATIONAL POLLUTANT DISCHARGE ELIMINATION SYSTEM (NPDES) PERMIT APPLICATIONS FOR STORM WATER DISCHARGE. PROJECT MUST ALSO CONFORM WITH ANY DESIGN AND CONSTRUCTION POLICIES ADOPTED BY THE CITY TO CONFORM WITH THESE REGULATIONS. THESE ACTIVITIES REQUIRE OBTAINING AN NPDES PERMIT FROM THE STATE WATER RESOURCE CONTROL BOARD TO PROJECTS WHICH QUALIFY, PRIOR TO THE COMMENCEMENT OF CONSTRUCTION ACTIVITY.

32. PRIOR TO ANY GRADING OPERATION THE GRADING CONTRACTOR AND THE PROJECT GEOTECHNICAL ENGINEER SHALL JOINTLY SEARCH THE SITE FOR EXISTING WELLS AND SEPTIC SYSTEMS. PROJECT SHALL NOTIFY THE CITY OF FINDINGS.

33. ANY EXISTING UTILITIES THAT WILL NOT BE USED OR ARE DISCOVERED ONSITE MUST BE ABANDONED AND MUST BE SHOWN ON THE IMPROVEMENT PLANS WITH APPROPRIATE NOTATIONS, PER CITY STANDARD. LATERALS MUST BE ABANDONED TO THE MAIN.

34. WHERE THE STREET SURFACE IS LESS THAN 5 YEARS OLD, INSTALLATION OF UTILITIES OTHER THAN OPEN CUTTING SHALL BE REQUIRED.

37. THE CONTRACTOR SHALL KEEP THE SWPPP DOCUMENTS ON SITE AT ALL TIMES DURING THE PROJECT.

38. EXISTING SEWER LATERALS SHALL BE INSPECTED AND TESTED AS REQUIRED IN THE MUNICIPAL CODE, CONDITIONS OF APPROVAL, OR AS DIRECTED BY THE CITY ENGINEER. SEWER LATERALS WHICH FALL TO MEET MINIMUM STANDARDS OF GREATER THAN 5 YEARS OLD SHALL BE REPAIRED OR REPLACED.

GOVERNING AGENCY

SONOMA COUNTY DEPARTMENT OF HEALTH SERVICES
625 5TH ST
SANTA ROSA, CA 95404
TEL: 707 - 565 - 6565

CITY OF ROHNERT PARK BUILDING DEPARTMENT
130 AVRAM AVE.
ROHNERT PARK, CA 94298
TEL: 707 - 588 - 2240

PROJECT INFORMATION

(E) HONEY BEE POOL (SEE CODE ANALYSIS, DRAWING A0.5)

BLDG. #	OCCUPANCY	# OF FLRS	CONST. TYPE	FIRE SPRINKLERED
POOL	A3	-	-	
TOILETS	B	1	VB	N/A
CONCESSION	B	1	VB	N/A
A.P. NO.	143-280-42 & 62			
ZONING	AG			
SEISMIC ZONE	4			

1

PROJECT TEAM

PROJECT ADDRESS
HONEYBEE POOL
1170 GOLF COURSE DR
ROHNERT PARK, CA 94928
PHONE: 707-586-1413

OWNER
CITY OF ROHNERT PARK
6750 COMMERCE BLVD.
ROHNERT PARK, CA 94928
PHONE: 707-795-2411 FAX: 707-588-3333

ARCHITECT
WLC ARCHITECTS, INC.
2600 TENTH STREET, SUITE 500
BERKELEY, CA 94710
PHONE: 510-450-1999 FAX: 510-450-2525

CIVIL ENGINEER
HOHBACH-LEWIN, INC.
260 SHERIDAN AVE, SUITE 150
PALO ALTO CA 94303
PHONE: 650-617-5930

STRUCTURAL ENGINEER
BASE DESIGN
582 MARKET ST, SUITE 1402
SAN FRANCISCO, CA 94104
PHONE: 415-466-2997

MECHANICAL ENGINEER
OPTIMUM ENERGY DESIGN INC.
5515 DOYLE STREET, SUITE 4
EMERYVILLE, CA 94608
PHONE: 510-837-9182 FAX:

PLUMBING ENGINEER
OPTIMUM ENERGY DESIGN INC.
5515 DOYLE STREET, SUITE 4
EMERYVILLE, CA 94608
PHONE: 510-837-9182 FAX:

ELECTRICAL ENGINEER
OPTIMUM ENERGY DESIGN INC.
5515 DOYLE STREET, SUITE 4
EMERYVILLE, CA 94608
PHONE: 510-837-9182 FAX:

GOVERNING CODES

2019 CALIFORNIA BUILDING STANDARDS ADMINISTRATIVE CODE
2019 CALIFORNIA BUILDING CODE (CBC) (2018 INTERNATIONAL BUILDING CODE (IBC) W/ CA AMENDMENTS)
2019 CALIFORNIA ELECTRICAL CODE (CEC) (2017 NATIONAL ELECTRIC CODE W/ CA AMENDMENTS)
2019 CALIFORNIA MECHANICAL CODE (CMC) (2018 UNIFORM MECHANICAL CODE (UMC) W/ CA AMENDMENTS)
2019 CALIFORNIA PLUMBING CODE (CPC) (2018 UNIFORM PLUMBING CODE (UPC) W/ CA AMENDMENTS)
2019 CALIFORNIA ENERGY CODE
2019 CALIFORNIA FIRE CODE (CFC) 1990 STATE FIRE MARSHAL REGULATIONS (AS AMENDED TO DATE)
2019 CALIFORNIA REFERENCED STANDARDS CODE 2019 CALIFORNIA GREEN CODE
CITY OF ROHNERT PARK MUNICIPAL CODE 1

2010 AMERICANS WITH DISABILITY ACT (ADA) STANDARDS FOR ACCESSIBLE DESIGN (ADAS)

(2018 INTERNATIONAL FIRE CODE (IFC) W/ CALIFORNIA AMENDMENTS)

APPLICABLE NFPA , UL AND ICC STANDARDS

NFPA 17 - DRY CHEMICAL EXTINGUISHING SYSTEMS, 2017 EDITION
NFPA 17A - WET CHEMICAL SYSTEMS, 2017 EDITION
NFPA 72 - NATIONAL FIRE ALARM CODE, 2016 EDITION
NFPA 80 - FIRE DOORS AND OTHER OPENING PROTECTIVES, 2016 EDITION
NFPA 92 - STANDARD FOR SMOKE CONTROL SYSTEMS, 2015 EDITION
NFPA 253 - CRITICAL RADIANT FLUX OF FLOOR COVERINGS, 2015 EDITION
NFPA 2001 - CLEAN AGENT FIRE EXTINGUISHING SYSTEMS, 2015 EDITION
ICC 300 - ICC STANDARDS FOR BLEACHERS, FOLDING AND TELESCOPIC SEATING, AND GRANDSTANDS, 2017 EDITION
UL 300 - FIRE TESTING OF FIRE EXTINGUISHING SYSTEMS FOR PROTECTION OF COMMERCIAL RESTAURANT COOKING AREAS, 2005 EDITION W/ REVISIONS THRU 2014
UL 464 - AUDIBLE SIGNAL APPLIANCES, 2003 EDITION
UL 521 - HEAT DETECTORS FOR FIRE PROTECTIVE SIGNALING SYSTEMS, 1999 EDITION W/ REVISIONS THRU JULY 30, 2005

NOTE: ALL NFPA STANDARDS AS LISTED ARE TO CONFORM TO THE EDITION AS LISTED WITH THE LATEST CALIFORNIA AMENDMENTS. REFERENCE THE 2019 CBC, TITLE 24, PART 2 - CHAPTER 35 FOR ADDITIONAL APPLICABLE NFPA, UL. STANDARDS AND ANY CALIFORNIA AMENDMENTS TO NFPA STANDARDS.

SCOPE OF WORK DESCRIPTION

THE SCOPE OF THE WORK AS STATED BELOW IS FOR CITY PLAN REVIEW PURPOSES ONLY AND DOES NOT CONSTITUTE A DETAILED AND FULL EXPLANATION OF THE REQUIREMENTS OF THE CONTRACT DOCUMENTS.

RENOVATION OF THE EXISTING HONEYBEE POOL, WORK INCLUDES BUT NOT LIMITED TO THE FOLLOWING: POOL PLASTER REFINISHING, ADA ACCESS TO POOL STAIRS, POOL DECK CRACKING AND SPALLING REPAIRS, CHEMICAL CONTROLLER FLOW INTERCONNECT, REMOVAL OF EXISTING WADING POOL AND BACK FILL FINISHED WITH CONCRETE PAVING, REPLACE PAIR GATES, PATH OF TRAVEL REPAIR FROM THE ACCESSIBLE PARKING STALLS TO THE SIDEWALK APPROACH TO THE RESTROOMS AND CONCESSION, REMOVE AND REPLACE THE SCREENS OUT SIDE BOTH RESTROOMS, TO MAINTAIN ADA CLEARANCE APPROACH TO THE RESTROOMS, REPLACE SIDINGS, STUDS AND FASCIA DRY ROT REPAIRS, EXTERIOR PAINT,REPLACE INTERIOR WOOD STUD FRAMING DUE TO ADA NEW PLUMBING FIXTURE CONFIGURATION, REPLACE SINK AND COUNTERTOP,REPLACE DOORS AND DOOR FRAMES, INTERIOR PAINT, AND INSTALLATION OF EPOXY FLOOR, FIBER REINFORCED PANELS, PORCELAIN WALL TILES, TOILET PARTITIONS, REPLACE CONCRETE SLAB AS REQUIRED FOR NEW SEWER AND WATER CONNECTION TO PLUMBING FIXTURES AT BOTH RESTROOMS, INSTALL PLASTIC LAMINATED COUNTER AT THE CONCESSION BUILDING, INSTALL SLIDING WINDOW IN FRONT OF THE STEEL ROLL-UP WINDOW, REMOVE SINK AND COUNTER, REPLACE SINK WITH ADA COMPLAINT SINK AND BASE CABINET, UPPER CABINETS, REPLACE DUTCH DOOR, ELECTRICAL, MECHANICAL EXHAUST FAN AND PLUMBING UPGRADES AT RESTROOMS AND CONCESSION BUILDING, MOVE ADA LIFT TO THE OTHER SIDE BY THE LIFE GUARD STAND, AND REPLACE PERIMETER FENCE, POST & GATES.

VICINITY MAP

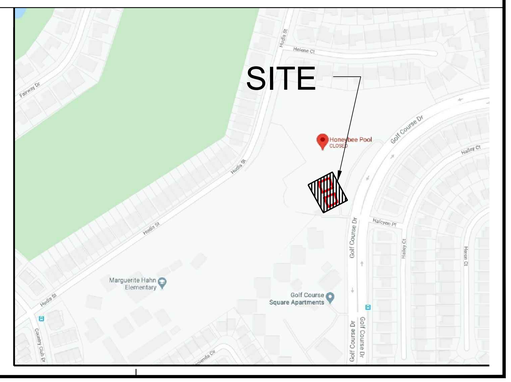

PBK
BERKELEY
2600 TENTH STREET, SUITE 700
BERKELEY, CA 94710-2597
510-450-1999 P

HONEYBEE POOL RENOVATION
CITY OF ROHNERT PARK
1170 GOLF COURSE DRIVE
ROHNERT PARK, CA 94928

LICENSED ARCHITECT LOREN GACHEN C-37926 12/31/23 STATE OF CALIFORNIA

CONSULTANT

3/8/2023 CONFORMED SET
APPROVED FOR CONSTRUCITON

VANESSA GARRETT P.E. CE84141 — DATE
CITY ENGINEER

REVISION SCHEDULE

NO	DATE	BY	DESCRIPTION
1	11/03/2022		AGENCY PLAN REVIEW
2	12/02/2022		AGENCY PLAN REVIEW

DRAWN:	CHECKED:
DATE: 02/25/2022	SCALE:
PROJECT NUMBER: 2010200	

GENERAL NOTES & PROJECT DIRECTORY

DRAWING NUMBER: A0.1

AGENCY BACKCHECK

DRAWING INDEX

DRAWING REF NO	DESCRIPTION
	GENERAL
A0.1	GENERAL NOTES / PROJECT DIRECTORY
A0.2	DRAWING INDEX
A0.3	DRAFTING SYMBOLS AND MATERIAL INDICATIONS
A0.4	ARCHITECTURAL DRAWING ABBREVIATIONS
A0.5	CODE ANALYSIS
A0.6	SITE ACCESSIBILITY PLAN
A0.7	FENCING PLAN
	ARCHITECTURAL
A1.0	SITE PLAN
A2.1	DEMO & FLOOR PLAN
A2.2	SLAB PLAN
A3.1	DEMO RCP AND NEW RCP PLAN
A4.1	EXISITING ROOF PLAN AND NEW ROOF PLAN
A5.1	EXTERIOR ELEVATIONS
A7.1	INTERIOR ELEVATIONS
A7.2	INTERIOR ELEVATIONS
A8.1	ROOM FINISH SCHEDULE AND DOOR AND FRAME SCHEDULE
	DETAILS
2.1	SITE DETAILS
6.1	CASEWORK & MISCELLANEOUS DETAILS
6.2	CASEWORK & MISCELLANEOUS DETAILS
7.1	THERMAL AND MOISTURE PROTECTION
8.1	WINDOW / DOOR DETAILS 1 1
9.3	SUSPENDED CEILING DETAILS
10.1	SPECIALTY DETAILS AND SCHEDULES
10.2	SPECIALTY DETAILS AND SCHEDULES
	CIVIL
C1.0	COVER SHEET
C1.1	NOTES
C2.0	DEMOLITION PLAN
C3.0	GRADING AND DRAINAGE PLAN
C3.1	PAVEMENT PLAN
C4.0	UTILITY PLAN
C5.0	EROSION CONTROL PLAN
C5.1	EROSION CONTROL DETAILS
C6.0	DETAILS
C6.1	DETAILS 2

DRAWING REF NO	DESCRIPTION
	STRUCTURAL
S1.0	SYMBOLS & ABBREVIATIONS
S1.1	GENERAL NOTES
S2.0	FOUNDATION & ROOF PLANS
S5.0	TYPICAL CONCRETE DETAILS
S5.1	CONCRETE DETAILS
S8.0	WOOD DETAILS
S8.1	FRAMING DETAILS
	MECHANICAL
M0.1	MECHANICAL GENERAL NOTES AND LEGEND 2
M2.0	MECHANICAL FLOOR PLAN - DEMO & NEW
M3.0	MECHANICAL ROOF PLAN
M6.1	MECHANICAL DETAILS
	PLUMBING
P0.1	PLUMBING NOTES AND LEGEND
PD2.0	PLUMBING DEMO FLOOR PLANS
P2.0	PLUMBING PROPOSED FLOOR PLANS
P6.0	PLUMBING DETAILS
	ELECTRICAL
E0.1	ELECTRICAL GENERAL NOTES & LEGENDS
E2.0	ELECTRICAL FLOOR PLAN - DEMO & REMODEL
E2.1	LIGHT FLOOR PLAN - DEMO & REMODEL

DRAWING REF NO	DESCRIPTION
	AQUATIC
DP-1	SWIMMING POOL/ WADING POOL DEMOLITION PLAN
SP-1	SWIMMING POOL LAYOUT PLAN
SP-2	SWIMMING POOL SECTIONS
SP-3	DETAILS
SP-4	DETAILS
	CA GREEN BUILDING STANDARDS CODE 1
GBS-01	CA GREEN BUILDING STANDARDS CODE
GBS-02	CA GREEN BUILDING STANDARDS CODE
GBS-03	CA GREEN BUILDING STANDARDS CODE

DRAWING INDEX CODE

DRAWING DISCIPLINE PREFIX INDEX

A. ARCHITECTURAL
C. CIVIL
D. INTERIOR DESIGN / FURNITURE
E. ELECTRICAL
F. FIRE PROTECTION / SPRINKLER SYSTEM
G. GRAPHICS
H. HAZARDOUS MATERIALS
K. DIETARY / FOOD SERVICE
L. LANDSCAPING
M. MECHANICAL
P. PLUMBING
S. STRUCTURAL
T. TELECOMMUNICATIONS

DRAWING GROUP PREFIX INDEX

0. GENERAL INFORMATION
1. SITE PLANS
2. FLOOR PLANS
3. REFLECTED CEILING PLANS
4. ROOF PLANS
5. EXTERIOR ELEVATIONS / SECTIONS
6. ENLARGED FLOOR PLANS
7. INTERIOR ELEVATIONS
8. CIRCULATION / STAIRS / ELEVATORS
9. 3D REPRESENTATIONS

DRAWING NUMBER CODE

AH2.2

- DRAWING NUMBER
- GROUP PREFIX INDEX
- BUILDING IDENTITY
- DISCIPLINE PREFIX INDEX

DISCIPLINE OR DRAWING GROUPS NOT INDICATED IN DRAWING INDEX ARE NOT APPLICABLE OR ARE INCLUDED IN THE 16 DIVISIONAL GROUPING OF THE DETAIL DRAWINGS. BUILDING IDENTITY DESIGNATIONS MAY OR MAY NOT BE UTILIZED. REFER TO KEY PLANS AND DRAWING INDEX FOR APPLICATION OF BUILDING DESIGNATIONS. THE DISCIPLINE AND DRAWING GROUPS ARE INTEGRAL WITH THE DETAIL DRAWINGS AND ARE NOT COMPLETE IN THEMSELVES. IN CASE OF DISCREPANCY BETWEEN THE INDEX AND THE DRAWINGS, THE DRAWINGS SHALL GOVERN.

ARCHITECTURAL DETAIL DRAWING PREFIX INDEX

DIVISION 1 - GENERAL REQUIREMENTS
DIVISION 2 - SITE WORK
DIVISION 3 - CONCRETE
DIVISION 4 - MASONRY
DIVISION 5 - METALS
DIVISION 6 - WOOD AND PLASTICS
DIVISION 7 - THERMAL AND MOISTURE PROTECTION
DIVISION 8 - DOORS AND WINDOWS
DIVISION 9 - FINISHES
DIVISION 10 - SPECIALTIES
DIVISION 11 - EQUIPMENT
DIVISION 12 - FURNISHINGS
DIVISION 13 - SPECIAL CONSTRUCTION
DIVISION 14 - CONVEYING SYSTEMS
DIVISION 15 - MECHANICAL- NOT USED
DIVISION 16 - ELECTRICAL- NOT USED

DETAIL DRAWING CODE

8.4

- DRAWING NUMBER
- DIVISION PREFIX INDEX

THE DIVISION PREFIX NUMBERS ARE THOSE IDENTIFIED BY THE 16 DIVISION GROUPING SYSTEM OF MASTER FORMAT AS PUBLISHED BY THE CONSTRUCTION SPECIFICATION INSTITUTE (CSI) AND SHALL NOT BE SOLEY REPRESENTATIVE OF REQUIREMENTS FOR ANY ONE DIVISION. THOSE DIVISIONS NOTED AS BEING NOT USED OR OMITTED ARE NOT APPLICABLE OR ARE INCLUDED UNDER DISCIPLINE DRAWINGS. IN CASE OF DISCREPANCY BETWEEN THE INDEX AND THE DRAWINGS, THE DRAWINGS SHALL GOVERN.

PBK
BERKELEY
2600 TENTH STREET, SUITE 700
BERKELEY, CA 94710-2597
510-450-1999 P

HONEYBEE POOL RENOVATION

CITY OF ROHNERT PARK
1170 GOLF COURSE DRIVE
ROHNERT PARK, CA 94928

LICENSED ARCHITECT
LOREN GACHEN
C-37926
Exp Date 12/31/23
STATE OF CALIFORNIA

CONSULTANT

VANESSA GARRETT P.E. CE84141 — DATE
CITY ENGINEER

REVISION SCHEDULE

NO	DATE	BY	DESCRIPTION
1	11/03/2022		AGENCY PLAN REVIEW
2	12/02/2022		AGENCY PLAN REVIEW

DRAWN: WLC	CHECKED: WLC
DATE: 02/25/2022	SCALE: NONE
PROJECT NUMBER: 2010200	

DRAWING INDEX

DRAWING NUMBER: A0.2

AGENCY BACKCHECK

Xref X3042TB-RANCHO.dwg

DRAFTING SYMBOL LEGEND

5461.0'
NEW / REQUIRED POINT ELEVATION (PLAN)

+ 5431.0'
EXISTING POINT ELEVATION (PLAN)

SURFACE DRAINAGE
ARROW INDICATES DIRECTION OF FLOW

E1257
N4660
SITE REFERENCE GRID
WORK POINT COORDINATES

N
PROJECT NORTH

2.3
B
COLUMN REFERENCE GRIDS
B,23 = COLUMN DESIGNATION

4
A5.1
ELEVATION
4 = ELEVATION DESIGNATION
A5.1 = REFERENCE DRAWING NUMBER
ARROW INDICATES DIRECTION OF VIEW

C
A5.2
BUILDING SECTION
C = SECTION DESIGNATION
A5.2 = REFERENCE DRAWING NUMBER
ARROW INDICATES DIRECTION OF VIEW

E
A5.3
WALL SECTION
E = SECTION DESIGNATION
A5.3 = REFERENCE DRAWING NUMBER
ARROW INDICATES DIRECTION OF VIEW

10
8.3
DETAIL
10 = DETAIL DESIGNATION
8.3 = REFERENCE DRAWING NUMBER

10
8.3

10
8.3

LOBBY
E1 | 6
900
45 *
76
AREA IDENTITY/ CODE ANALYSIS
LOBBY = ROOM NAME
E1 = OCCUPANCY GROUP
6 = SPACE USE - REF SPACE USE SCHEDULE
900 = FLOOR AREA - SQUARE FEET
45 = OCCUPANT LOAD (CBC TABLE 1004.5)
* = OCCUPANT LOAD SIGN REQUIRED WHEN NOTED - (CBC SEC 1004.9) REF SIGNAGE SCHEDULE
76 = ACCUMULATIVE OCCUPANT LOAD OF SPACE

LOBBY
1
A230
4 9/A7.6 2
A1 | B2 | C3
10-0 | D4
3
AREA IDENTITY & FINISH REFERENCE/ PLAN
LOBBY = ROOM NAME
A230 = AREA IDENTITY
A - BUILDING OR AREA DESIGNATION
2 - FLOOR NUMBER
30 - ROOM NUMBER
9/A7.6 = INTERIOR ELEVATION DESIGNATION AND DRAWING NUMBER WHERE ELEVATION IS SHOWN
A1,B2,C3,D4 = ROOM MATERIAL CODE/ FINISH
A1 = FLOOR AND BASE FINISH
B2 = WALL MATERIAL / FINISH
C3 = CEILING MATERIAL / FINISH
D4 = WAINSCOT MATERIAL / HEIGHT
* = DESIGNATES SPECIAL CONDITION. REFERENCE INTERIOR ELEVATION OR REFLECTED CEILING PLAN FOR DESCRIPTION
10-0 = CEILING HEIGHT IN FEET & INCHES
1,2,3, OR 4 = ELEVATION IDENTITY NUMBER- NUMBER POINTS TO WALL SHOWN IN ELEVATION

LOBBY
1
4 A230 2
9/A7.6
3
AREA IDENTITY/ PLAN
LOBBY = ROOM NAME
A230 = AREA IDENTITY
A - BUILDING OR AREA DESIGNATION
2 - FLOOR NUMBER
30 - ROOM NUMBER
9/A7.6 = INTERIOR ELEVATION DESIGNATION AND DRAWING NUMBER WHERE ELEVATION IS SHOWN
1,2,3, OR 4 = ELEVATION IDENTITY NUMBER- NUMBER POINTS TO WALL SHOWN IN ELEVATION

3
REVISION
3 = REVISION NUMBER

123
EQUIPMENT IDENTIFICATION
123 = EQUIPMENT NUMBER

G
GLAZED OPENING OR WINDOW TYPE
NUMERICAL DESIGNATION = GLAZED OPENING
ALPHABETICAL DESIGNATION = WINDOW TYPE

A
250
DOOR IDENTIFICATION
A = BUILDING DESIGNATION
2 = FLOOR NUMBER
50 = DOOR NUMBER

0654
REFERENCE NOTE IDENTIFICATION
06 = DIVISIONAL PREFIX
54 = NOTE NUMBER

C42B*
WALL IDENTIFICATION
C = WALL TYPE DESIGNATION - REF SCHEDULE
4 = NOMINAL STUD OR MASONRY SIZE
2 = FIRE RATING IN HOURS
B = ADDITIONAL REMARKS - REF SCHEDULE
* = OPTIONAL CHARACTER

3 A
TOILET ACCESSORY IDENTIFICATION
3 = ACCESSORY NUMBER - REF SCHEDULE
A = ACCESSIBLE WHEN NOTED

100 M L
CABINET DESIGNATION
100 = WI CABINET NUMBER
M = MODIFIED AS NOTED
L = LOCK WHEN NOTED

FFE 0'-0"
LEVEL LINE, CONTROL POINT
FFE 0'-0" = ELEVATION

UP 12R AT 6"
12T AT 11"
STAIR DIRECTION SYMBOL
NUMBER AND SIZE OF TREADS AND RISERS IN INCHES

MATCH LINE AND AREA DESIGNATOR
SHADED PORTION IS THE SIDE CONSIDERED

CENTER LINES, FLOOR LINES AND LEVEL LINES

SECTION LINES

PROPERTY LINES, BOUNDRY LINES AND MATCH LINES

HIDDEN CONSTRUCTION FEATURE

BREAKS OF BUILDING COMPONENTS

MATERIALS INDICATION LEGEND

PLAN / SECTION

- EARTH
- POROUS FILL (STONE, GRAVEL, ETC.)
- ROCK
- ASPHALT PAVING
- CAST-IN-PLACE CONCRETE (OR CONCRETE FILL)
- PRECAST CONCRETE (GLASS FIBER REINFORCED CONCRETE)
- CEMENTITIOUS DECKS & TOPPINGS (GYPSUM, INSULATING CONCRETE)
- BRICK (COMMON OR FACE, LARGE SCALE)
- GLAZED BRICK
- FIRE BRICK
- CONCRETE MASONRY UNITS (CMU, LARGE SCALE CONCRETE BLOCK)
- GLAZED CONCRETE MASONRY UNITS
- GLASS UNIT MASONRY
- GROUT
- CUT STONE (MARBLE, GRANITE, LIMESTONE)
- CAST STONE
- SLATE, SOAPSTONE, FLAGGING
- STRUCTURAL CLAY TILE
- GLAZED STRUCTURAL CLAY TILE
- ALUMINUM (LARGE SCALE)
- STEEL (LARGE SCALE)
- ORNAMENTAL METAL (BRASS, BRONZE)
- METAL (SMALL SCALE, STRUCTURAL OR SHEET)
- PARTICLE BOARD
- PLYWOOD (LARGE SCALE)
- WOOD FINISHED
- 2 10 WOOD ROUGH/CONTINUOUS (2 X 10 - SIZE NOTED)
- 2 10 WOOD ROUGH/BLOCKING (2 X 10 - SIZE NOTED)
- INSULATION (LOOSE OR BATT)
- INSULATION (RIGID)
- GLASS (LARGE SCALE)
- ACOUSTICAL TILE
- CERAMIC TILE
- GYPSUM BOARD
- SAND, CEMENT, ETC.
- METAL LATH AND PLASTER
- RESILIENT FLOORING
- CARPET
- TERRAZZO

ELEVATION

- CONCRETE, PLASTER, GYPSUM BOARD
- MARBLE, FIELD STONE
- MASONRY (BRICK OR CMU)
- GLAZING (CLEAR, TEMPERED, ETC.)
- GLAZING (WIRE, LABELED)
- SHEET METAL
- CERAMIC TILE

WALL MATERIALS LEGEND

PLAN

- EXISTING WALL TO BE REMOVED
- EXISTING WALL TO REMAIN
- STUD WALL - REF SCHEDULE FOR STUD TYPE, SIZE AND SPACING
- BRICK MASONRY WALL - REF SCHEDULE FOR SIZE
- CONCRETE MASONRY WALL (CMU) - REF SCHEDULE FOR TYPE AND SIZE
- COMPOSITE MASONRY WALL - REF SCHEDULE FOR MASONRY TYPES AND SIZES
- COMPOSITE VENEER WALL - REF SCHEDULE FOR MASONRY AND STUD TYPE, SIZE AND SPACING
- SHAFT WALL - REF SCHEDULE FOR STUD TYPE, SIZE AND SPACING
- SOUND RATED WALL - REF SCHEDULE FOR WALL MATERIALS
- CONCRETE WALL - REF SCHEDULE FOR SIZE
- ONE HOUR FIRE RATED WALL - REF PLAN AND SCHEDULE FOR WALL MATERIALS AND CBC/UL/GA LISTING
- TWO HOUR FIRE RATED WALL - REF PLAN AND SCHEDULE FOR WALL MATERIALS AND CBC/UL/GA LISTING

GENERAL NOTES:

1. REFER TO FINISH SCHEDULE FOR WALL FINISHES
2. REFER TO WALL TYPE SCHEDULE FOR WALL DETAILS AND MATERIALS OF CONSTRUCTION
3. ALL WALL DEFINITIONS MAY NOT BE USED, REFER TO FLOOR PLAN(S) FOR APPLICABLE WALL DEFINITIONS USED.

REFERENCE NOTES

PBK
BERKELEY
2600 TENTH STREET, SUITE 700
BERKELEY, CA 94710-2597
510-450-1999 P

HONEYBEE POOL RENOVATION
CITY OF ROHNERT PARK
1170 GOLF COURSE DRIVE
ROHNERT PARK, CA 94928

LICENSED ARCHITECT
LOREN GACHEN
C-37926
Exp 12/31/23
STATE OF CALIFORNIA

CONSULTANT

VANESSA GARRETT P.E. CE84141
CITY ENGINEER
DATE

REVISION SCHEDULE

NO	DATE	BY	DESCRIPTION
1	11/03/2022		AGENCY PLAN REVIEW
2	12/02/2022		AGENCY PLAN REVIEW

DRAWN:	CHECKED:
DATE: 02/25/2022	SCALE:
PROJECT NUMBER: 2010200	

DRAFTING SYMBOLS AND MATERIAL INDICATIONS

DRAWING NUMBER: A0.3

AGENCY BACKCHECK

ARCHITECTURAL DRAWING ABBREVIATIONS

SYMBOLS

&	AND
∠	ANGLE
@	AT
CL	CENTERLINE
⊏	CHANNEL
∅	DIAMETER OR ROUND
(E)	EXISTING
(N)	NEW
d	PENNY (NAILS)
⊥	PERPENDICULAR
PL	PLATE
#	POUND OR NUMBER

A/C	AIR CONDITIONING
A/E	ARCHITECT/ENGINEER
AB	ANCHOR BOLT
ABAN	ABANDON
ABC	AGGREGATE BASE COURSE
ABV	ABOVE
AC	ASPHALTIC CONCRETE
ACC	ACCESS(IBLE)
ACST	ACOUSTICAL
ACT	ACOUSTICAL CEILING TILE
AD	AREA DRAIN
ADDM	ADDENDUM
ADH	ADHESIVE
ADJ	ADJUSTABLE
ADJC	ADJACENT
AFF	ABOVE FINISHED FLOOR
AFG	ABOVE FINISHED GRADE
AGGR	AGGREGATE
AHU	AIR HANDLING UNIT
AL	ALUMINUM
ALT	ALTERNATE
ANC	ANCHOR, ANCHORAGE
APLD	APPLIED
APPRX	APPROXIMATE
ARCH	ARCHITECT(URAL)
ASC	ABOVE SUSPENDED CEILING
ASPH	ASPHALT
ASSY	ASSEMBLY
ASYM	ASYMMETRICAL
AWG	AMERICAN WIRE GAGE

BC	BACK OF CURB
BD	BOARD
BITUM	BITUMINOUS
BLDG	BUILDING
BLK	BLOCK
BLKG	BLOCKING
BLW CLG	BELOW CEILING
BLW FFLR	BELOW FINISH FLOOR
BLW	BELOW
BM	BENCH MARK
BN	BOUNDARY NAILING
BOT	BOTTOM
BRCG	BRACING
BRDG	BRIDGING
BRG	BEARING
BRK	BRICK
BRKT	BRACKET
BRS	BRASS
BRZ	BRONZE
BS	BOTH SIDES
BSMT	BASEMENT
BTWN	BETWEEN
BUR	BUILT UP ROOFING
BW	BOTH WAYS

C&G	CURB AND GUTTER
CAB	CABINET
CAD	CADMIUM
CB	CATCH BASIN
CBB	CEMENTITIOUS BACKER BOARD
CEM	CEMENT
CER	CERAMIC
CFCI	CONTRACTOR FURNISH CONTRACTOR INSTALLED
CFLG	COUNTERFLASHING
CFOI	CONTRACTOR FURNISH OWNER INSTALLED
CG	CORNER GUARD
CHBD	CHALKBOARD
CHFR	CHAMFER
CI	CAST IRON
CIR	CIRCLE
CIRC	CIRCULAR, CIRCUMFERENCE
CJ	CONSTRUCTION JOINT
CL	CHAIN LINK
CLG	CEILING
CLJ	CONTROL JOINT
CLL	CONTRACT LIMIT LINE
CLOS	CLOSURE
CLR	CLEAR(ANCE)
CLRM	CLASSROOM
CMPST	COMPOSITION
CMU	CONCRETE MASONRY UNIT
CNCL	CONCEALED
CNR	CORNER
CNTR	COUNTER
COL	COLUMN
COM	COMMON
COMB	COMBINATION
COMPT	COMPARTMENT
CONC	CONCRETE
CONF	CONFERENCE
CONN	CONNECTION
CONSTR	CONSTRUCTION
CONT	CONTINUOUS (ATION)
CONTR	CONTRACT(OR)
COORD	COORDINATE
CORR	CORRIDOR
CPR	COPPER
CPRS	COMPRESS(ED), (ION), (IBLE)
CPT	CARPET(ED)
CRS	COLD ROLLED STEEL
CS	CAST STONE
CSG	CASING
CSK	COUNTERSUNK
CSMT	CASEMENT
CSWK	CASEWORK
CT	CERAMIC TILE
CTB	CERAMIC TILE BASE
CTF	CERAMIC TILE FLOOR
CTG	COATING
CTR	CENTER

CUFT	CUBIC FOOT
CUIN	CUBIC INCH
CUST	CUSTODIAN
CUYD	CUBIC YARD

D	DRAIN
DA	DOUBLEACTING
DBL	DOUBLE
DEMO	DEMOLISH, DEMOLITION
DEP	DEPRESSED
DEPT	DEPARTMENT
DET	DETAIL
DF	DRINKING FOUNTAIN
DH	DOUBLE HUNG
DIA	DIAMETER
DIAG	DIAGONAL
DIFF	DIFFUSER
DIM	DIMENSION
DISP	DISPENSER
DIV	DIVISION
DMPF	DAMPPROOFING
DMT	DEMOUNTABLE
DN	DOWN
DR	DOOR
DRB	DRAINBOARD
DRLV	DOOR LOUVER
DS	DOWNSPOUT
DSP	DRY STANDPIPE
DT	DRAIN TILE
DVTL	DOVETAIL
DW	DISHWASHER
DWG	DRAWING
DWL	DOWEL
DWR	DRAWER

E	EAST
EA	EACH
EAR	EXHAUST AIR REGISTER
EB	EXPANSION BOLT
EE	EACH END
EF	EACH FACE
EFS	EXTERIOR FINISH SYSTEM
EHD	ELECTRIC HAND DRYER
EIFS	EXTERIOR INSULATION AND FINISH SYSTEM
EJ	EXPANSION JOINT
EL	ELEVATION
ELAST	ELASTOMERIC
ELEC	ELECTRIC(AL)
ELEV	ELEVATOR
EM	EXPANDED METAL
EMER	EMER EMERGENCY
EN	EDGE NAILING
ENCL	ENCLOSE(URE)
ENGR	ENGINEER
ENTR	ENTRANCE
EP	ELECTRICAL PANELBOARD
EQ	EQUAL
EQUIP	EQUIPMENT
ESC	ESCUTCHEON
ESCL	ESCALATOR
ESMT	EASEMENT
EW	EACH WAY
EWC	ELECTRIC WATER COOLER
EWH	ELECTRICAL WATER HEATER
EWS	EYE WASH STATION
EXC	EXCAVATE
EXG	EXISTING
EXH	EXHAUST
EXP	EXPOSED
EXPN	EXPANSION
EXS	EXTRA STRONG
EXT	EXTERIOR

F/F	FACE TO FACE
FA	FIRE ALARM
FAB	FABRIC
FBD	FIBERBOARD
FBRK	FIRE BRICK
FCBRK	FACE BRICK
FD	FLOOR DRAIN
FDTN	FOUNDATION
FE	FIRE EXTINGUISHER
FEC	FIRE EXTINGUISHER CABINET
FFA	FROM FLOOR ABOVE
FFB	FROM FLOOR BELOW
FFEL	FINISHED FLOOR ELEVATION
FFL	FINISHED FLOOR LINE
FGL	FIBERGLASS
FHC	FIRE HOSE CABINET
FHMS	FLATHEAD MACHINE SCREW
FHWS	FLATHEAD WOOD SCREW
FIN	FINISH(ED)
FJT	FLUSH JOINT
FLASH	FLASH(ING)
FLDG	FOLDING
FLG	FLOORING
FLR	FLOOR
FLUOR	FLUORESCENT
FN	FIELD NAILING
FOC	FACE OF CONCRETE
FOF	FACE OF FINISH
FOG	FACE OF GRID
FOM	FACE OF MASONRY
FOS	FACE OF STUDS
FPL	FIREPLACE
FPRF	FIREPROOF(ING)
FR	FRAME(D), (ING)
FRG	FIBER REINFORCED GYPSUM
FRGL	FIRE RESISTIVE GLAZING
FRP	FIBERGLASS REINFORCED PLASTIC
FRTD	FIRE RATED
FRTW	FIRE RETARDANT TREATED WOOD
FRZ	FREEZER
FS	FAR SIDE
FSTN	FASTEN, FASTENER
FT	FOOT OR FEET
FTG	FOOTING
FURG	FURRED (ING)
FUT	FUTURE
FWC	FABRIC WALL COVERING

GA	GAGE
GAL	GALLON
GALV	GALVANIZED
GB	GRAB BAR
GFRC	GLASS FIBER REINFORCED CONCRETE
GI	GALVANIZED IRON
GL	GLASS
GLU LAM	GLUE LAMINATED
GLZ	GLAZING
GLZCMU	GLAZED CONCRETE MASONRY UNITS
GND	GROUND
GPC	GYPSUM PLASTER CEILING
GR LN	GRADE LINE
GR BM	GRADE BEAM
GR	GRADE, (ING)
GRBD	GARBAGE DISPOSER
GSB	GYPSUM SHEATHING BOARD
GSS	GALVANIZED STEEL SHEET
GST	GLAZED STRUCTURAL TILE
GT	GROUT
GVL	GRAVEL
GYP	GYPSUM

HB	HOSE BIBB
HC	HOLLOW CORE
HD	HEAVY DUTY
HD JT	HEAD JOINT
HDAS	HEADED ANCHOR STUD
HDR	HEADER
HDW	HARDWARE
HDWD	HARDWOOD
HEX	HEXAGONAL
HGR	HANGER
HLDN	HOLD DOWN
HM	HOLLOW METAL
HMD	HOLLOW METAL DOOR
HMDF	HOLLOW METAL DOOR AND FRAME
HMF	HOLLOW METAL FRAME
HNDRL	HANDRAIL
HORIZ	HORIZONTAL
HPT	HIGH POINT
HR	HOUR
HT	HEIGHT
HTG	HEATING
HVAC	HEATING/VENTILATING/ AIR CONDITIONING
HWH	HOT WATER HEATER

ID	INSIDE DIAMETER
INCL	INCLUDE(D), (ING)
INSTL	INSTALL
INSUL	INSULATE(D), (ION)
INT	INTERIOR
INV	INVERT
IPS	IRON PIPE SIZE

JAN	JANITOR
JST	JOIST
JT	JOINT

KIT	KITCHEN
KO	KNOCKOUT
KPL	KICKPLATE

LAB	LABORATORY
LAD	LADDER
LAM	LAMINATE(D)
LAV	LAVATORY
LBL	LABEL
LBR	LUMBER
LBS	POUND
LCT	LINOLEUM COMPSITE TILE
LDR	LEADER
LG	LENGTH
LH	LEFT HAND
LHR	LEFT HAND REVERSE
LKNT	LOCKNUT
LKR	LOCKER
LKWASH	LOCKWASHER
LLH	LONG LEG HORIZONTAL
LLV	LONG LEG VERTICAL
LMST	LIMESTONE
LNDSCP	LANDSCAPE(D)
LNTL	LINTEL
LP	LIGHTPROOF
LPT	LOW POINT
LT	LIGHT
LTWT	LIGHT WEIGHT
LVL	LEVEL(ER)
LVR	LOUVER
LVT	LUXURY VINYL TILE
LW	LIGHTWEIGHT CONCRETE
LWIC	LIGHTWEIGHT INSULATING CONCRETE

MAINT	MAINTAIN(ANCE)
MAS	MASONRY
MATL	MATERIAL
MAX	MAXIMUM
MB	MACHINE BOLT
MBR	MEMBER
MC	MEDICINE CABINET
MCB	METAL CORNER BEAD
MDO	MEDIUM DENSITY OVERLAID
MECH	MECHANICAL
MED	MEDIUM
MEMB	MEMBRANE
MEZZ	MEZZANINE
MFD	METAL FLOOR DECKING
MFR	MANUFACTURE(ER)
MH	MANHOLE
MIN	MINIMUM
MIRR	MIRROR
MISC	MISCELLANEOUS
ML	METAL LATH
MLDG	MOLDING
MLWK	MILLWORK
MO	MASONRY OPENING
MOD	MODULE (AR)
MR	MOISTURE RESISTANT
MRB	MARBLE
MRD	METAL ROOF DECKING
MS	MACHINE SCREW
MTD	MOUNTED
MTL	METAL
MTR	MORTAR
MULL	MULLION
MVBL	MOVABLE
MWP	MEMBRANE WATER PROOFING
N	NORTH
NA	NOT APPLICABLE
NAT	NATURAL
NCOMBL	NONCOMBUSTIBLE
NE	NOT EXCEEDING
NF	NEAR FACE
NIC	NOT IN CONTRACT
NLB	NON-LOAD BEARING
NM	NONMETALLIC
NO	NUMBER
NOM	NOMINAL
NR	NOISE REDUCTION
NRC	NOISE REDUCTION COEFFICIENT
NRCA	NATIONAL ROOFING CONTRACTORS ASSOCIATION
NS	NEAR SIDE
NTS	NOT TO SCALE

O/O	OUT TO OUT
OA	OVERALL
OBS	OBSCURE
OC	ON CENTER(S)
OD	OUTSIDE DIAMETER
OFCI	OWNER FURNISHED - CONTRACTOR INSTALLED
OFF	OFFICE
OFOI	OWNER FURNISHED - OWNER INSTALLED
OFS	OUTSIDE FACE OF STUD
OHMS	OVALHEAD MACHINE SCREW
OHWS	OVALHEAD WOOD SCREW
OPH	OPPOSITE HAND
OPNG	OPENING
OPP	OPPOSITE
OPQ	OPAQUE
OPR	OPERABLE
ORD	OVERFLOW ROOF DRAIN
OVFL	OVERFLOW
OVHD	OVERHEAD

PAR	PARALLEL
PAT	PATTERN
PB	PANIC BAR
PBD	PARTICLE BOARD
PC	PORTLAND CEMENT
PCC	PRECAST CONCRETE
PCP	PORTLAND CEMENT PLASTER
PED	PEDESTAL
PERF	PERFORATE(D)
PERIM	PERIMETER
PERP	PERPENDICULAR
PGBD	PEGBOARD
PH	PHASE
PHS	PHILLIPS HEAD SCREW
PI	POINT OF INTERSECTION
PIV	POST INDICATOR VALVE
PL	PROPERTY LINE
PLAM	PLASTIC LAMINATE
PLAS	PLASTER
PLBG	PLUMBING
PLYWD	PLYWOOD
PNEU	PNEUMATIC
PNL	PANEL
PNT	PAINT(ED)
POL	POLISHED
POLY	POLYETHYLENE
PORC	PORCELAIN
PORT	PORTABLE
PR	PAIR
PRCST	PRECAST
PREFAB	PREFABRICATE(D)
PREFIN	PREFINISHED
PREFMD	PREFORMED
PRKG	PARKING
PRML	PREMOLDED
PROJ	PROJECT
PROP	PROPERTY
PSCONC	PRESTRESSED CONCRETE
PT	POINT
PTCONC	POST TENSIONED CONCRETE
PTD	PAPER TOWEL DISPENSER
PTN	PARTITION
PTR	PAPER TOWEL RECEPTOR
PVC	POLYVINYL CHLORIDE
PVG	PAVE(D), (ING)
PVMT	PAVEMENT

QT	QUARRY TILE
QTB	QUARRY TILE BASE
QTF	QUARRY TILE FLOOR
QTR	QUARTER
QTY	QUANTITY

R	RISER
RA	RETURN AIR
RAB	RABBET
RAD	RADIUS
RB	RESILIENT BASE
RBR	RUBBER
RCP	REINFORCED CONCRETE PIPE
RCVR	RECEIVER
RD	ROOF DRAIN
RDGINS	RIGID INSULATION
RDWY	ROADWAY
REBAR	REINFORCING STEEL BARS
REC	RECESSED
RECT	RETANGULAR
REF	REFERENCE
REFL	REFLECT(ED), (IVE), (OR)
REFR	REFRIGERATOR
REG	REGISTER
REINF	REINFORCE(D), (ING), (MENT)
REM	REMOVE(ABLE)
REP	REPAIR
REPL	REPLACE
REQD	REQUIRED
RESIL	RESILIENT
RET	RETURN
REV	REVISION(S), REVISED
RF	RESILIENT FLOORING
RFG	ROOFING
RFH	ROOF HATCH
RH	RIGHT HAND
RHMS	ROUND HEAD MACHINE SCREW
RHR	RIGHT HAND REVERSE
RHWS	ROUND HEAD WOOD SCREW
RL	ROOF LEADER
RLG	RAILING
RM	ROOM
RND	ROUND
RO	ROUGH OPENING
ROW	RIGHT OF WAY
RS	ROUGH SAWN
RTF	RUBBER TILE FLOORING
RTU	ROOF TOP UNIT
RV	ROOF VENT
RVL	REVEAL
RVS	REVERSE (SIDE)
RVT	RIVET(ED)
RWD	REDWOOD
RWL	RAIN WATER LEADER

S	SOUTH
S2S	SURFACED TWO SIDES
S4S	SURFACED FOUR SIDES
SA	SUPPLY AIR
SALV	SALVAGE
SAT	SUSPENDED ACOUSTICAL TILE
SB	SPLASH BLOCK
SBSTR	SUBSTRATE
SC	SOLID CORE
SCD	SEAT COVER DISPENSER
SCHED	SCHEDULE
SCP	SCUPPER
SCRN	SCREEN
SD	STORM DRAIN
SDBL	SANDBLAST
SECT	SECTION
SGL	SINGLE
SHR	SHOWER
SHT	SHEET(ING)
SHTHG	SHEATHING
SHV	SHELVES (ING)
SIM	SIMILAR
SKLT	SKYLIGHT
SLD	SEALED
SLDG	SLIDE (ING)
SLDR	SOLDER
SLNT	SEALANT
SLV	SLEEVE
SMACNA	SHEET METAL AND AIR CONDITIONING CONTRACTORS NATIONAL ASSOCIATION
SMLS	SEAMLESS
SND	SANITARY NAPKIN DISPENSER
SNDINS	SOUND INSULATION
SNDU	SANITARY NAPKIN DISPOSAL UNIT
SNT	SEALANT
SPC	SUSPENDED PLASTER CEILING
SPD	SOAP DISPENSER
SPEC	SPECIFICATION(S) (ED)
SPRT	SUPPORT
SQ	SQUARE
SSK	SERVICE SINK
SSD	SEE STRUCTURAL DRAWING △1
SST	STAINLESS STEEL
STA	STATION
STAG	STAGGERED
STC	SOUND TRANSMISSION CLASS
STD	STANDARD
STG	SEATING
STIF	STIFFENER
STIR	STIRRUP
STL	STEEL
STOR	STORAGE
STR	STRAIGHT
ST	STREET
STRCT	STRUCTURAL
STU	STRUCT
SUSP	SUSPENDED
SV	SHEET VINYL
SYMM	SYMMETRICAL
SYNTH	SYNTHETIC
SYS	SYSTEM

T	TREAD
T & B	TOP AND BOTTOM
TB	THRU BOLT
TBE	THREADED BOTH ENDS
TBM	TEMPORARY BENCH MARK
TD	TOWEL DISPENSER
TDR	TOWEL DISPENSER/ RECEPTACLE
TEL	TELEPHONE
TEMP	TEMPORARY
TER	TERRAZZO
TFA	TO FLOOR ABOVE
TFB	TO FLOOR BELOW
T & G	TONGUE & GROOVE
THD	THREAD(ED)
THERM	THERMAL
THK	THICK(NESS)
THRES	THRESHOLD
TKBD	TACKBOARD
TMPD	TEMPERED
TOB	TOP OF BEAM
TOC	TOP OF CURB
TOF	TOP OF FOOTING
TOFF	TOP OF FINISH FLOOR
TOJ	TOP OF JOIST
TOL	TOLERANCE
TOM	TOP OF MASONRY
TOP	TOP OF PARAPET
TOPV	TOP OF PAVEMENT
TOS	TOP OF SHEATHING
TOSL	TOP OF SLAB
TOST	TOP OF STEEL
TOW	TOP OF WALL
TPD	TOILET PAPER DISPENSER
TPTN	TOILET PARTITION
TS	TUBE STEEL
TWLB	TOWEL BAR
TV	TELEVISION
TYP	TYPICAL

UC	UNDERCUT
UGND	UNDERGROUND
UL	UNDERWRITERS LABORATORY
UNFIN	UNFINISHED
UON	UNLESS OTHERWISE NOTED
UR	URINAL
VAR	VARIES
VB	VINYL BASE
VCT	VINYL COMPOSITION TILE
VERT	VERTICAL
VEST	VESTIBULE
VFAT	VINYL FACED ACOUSTIC TILE
VIF	VERIFY IN FIELD
VJ	V-JOINT(ED)
VNR	VENEER
VR	VAPOR RETARDER
VTR	VENT THROUGH ROOF
VWC	VINYL WALL COVERING

W/	WITH
W/W	WALL TO WALL
W/O	WITHOUT
W	WEST
WBL	WOOD BLOCKING
WC	WATER CLOSET
WD	WOOD
WDP	WOOD PANELING
WDW	WINDOW
WF	WIDE FLANGE
WFS	WOOD FURRING STRIP
WGL	WIRED GLASS
WH	WALL HUNG
WI	WROUGHT IRON
WID	WIDTH, WIDE
WLD	WELD(ED)
WM	WIRE MESH
WP	WATERPROOF(ING)
WPT	WORKING POINT
WR	WIRE ROPE
WS	WOOD SCREW
WSCT	WAINSCOT
WT	WEIGHT
WWF	WELDED WIRE FABRIC

XBRACE	CROSS BRACE
XFMR	TRANSFORMER
XSECT	CROSS SECTION

YCO	YARD CLEANOUT
YD	YARD

PBK
BERKELEY
2600 TENTH STREET, SUITE 700
BERKELEY, CA 94710-2597
510-450-1999 P

HONEYBEE POOL RENOVATION

CITY OF ROHNERT PARK
1170 GOLF COURSE DRIVE
ROHNERT PARK, CA 94928

LICENSED ARCHITECT
LOREN GACHEN
C-37926
12/31/23
STATE OF CALIFORNIA

CONSULTANT

VANESSA GARRETT P.E. CE84141 — DATE
CITY ENGINEER

REVISION SCHEDULE

NO	DATE	BY	DESCRIPTION
1	11/03/2022		AGENCY PLAN REVIEW
2	12/02/2022		AGENCY PLAN REVIEW

DRAWN:	**CHECKED:**
DATE: 02/25/2022	**SCALE:**
PROJECT NUMBER: 2010200	

ARCHITECTURAL DRAWING ABBREVIATIONS

DRAWING NUMBER: A0.4

AGENCY BACKCHECK

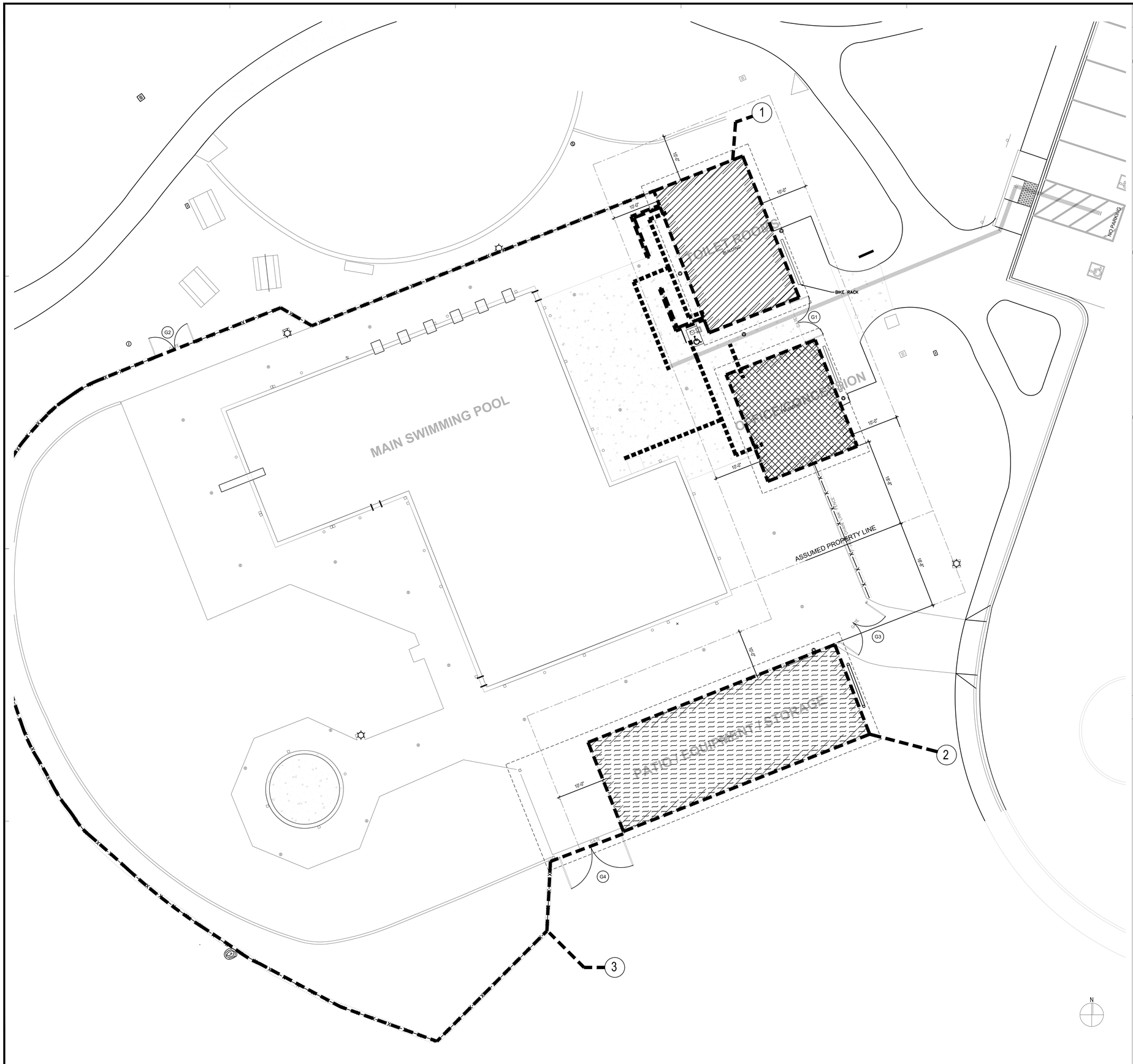

SITE PLAN 1/8" = 1' - 0" 1

CODE ANALYSIS

1 POOL TOILETS SHOWER & CONCESSION BUILDINGS

BLDG. SUMMARY
1. TOILETS & SHOWER FLOOR AREA: 482 SF
2. CONCESSION FLOOR AREA: OFFICE. 419 SF

OCCUPANCY: B
BLDG . HT: 1 STORY
TYPE OF CONSTRUCTION: V-B
BLDG. ANALYSIS:
ACTUAL FLOOR AREA & OCCUPANCY:
TOILET : 482 SF
B: 419 SF

BASIC ALLOWABLE AREA FOR B:
9,000 SF (PER CBC TABLE 506.2)
482 + 419 = 901 SF < 9,000 SF OK

2 EQUIPMENT & STORAGE BLDG

BLDG. SUMMARY
1. FLOOR AREA: 864 SF

OCCUPANCY: S-1
BLDG . HT: 1 STORY
TYPE OF CONSTRUCTION: V-B
BLDG. ANALYSIS:
ACTUAL FLOOR AREA & OCCUPANCY:
S-1: 864 SF

BASIC ALLOWABLE AREA FOR S-1:
9,000 SF (PER CBC TABLE 506.2)
864 SF < 9,000 SF OK

3 POOL DECK AREA CALCULATION.
POOL DECK SUMMARY:
TOTAL POOL DECK AREA: 11,043 SF
MAIN SWIMMING POOL WATER AREA: 4,635 SF
USE : PUBLIC SWIMMING ACTIVITY
OCCUPANCY: A-3

POOL ANALYSIS:
ACTUAL FLOOR AREA & OCCUPANCY:
POOL DECK AREA: 11,043 SF
POOL WATER AREA: 4,635 SF

ALLOWABLE PER OCCUPANT:
POOL DECK AREA: 15 GROSS
POOL WATER AREA: 50 GROSS
11,043 / 15= 736.2 = 737 OCCUPANTS
4,635 / 50 = 92.7 x 93 OCCUPANTS
TOTAL OCCUPANTS = 830 OCCUPANTS
MIN.EGRESS WIDTH PER (CBC 1005.3.2)
O.L . x .2 INCHES
830 x .2 = 166"
GATE PROVIDED: G1 x G2 = 48 x 4 = 192" WITH PANIC HARDWARE

LEGEND

DEMO AND REPLACE WITH (N) VINYL COATED CHAIN LINK FENCE W/ VAINLY SLATS

ASSUMED PROPERTY LINE

BLDGS. OCCUPANCY ALLOWABLE AREA CALCULATION

TOILETS

B

S - 1

PBK
BERKELEY
2600 TENTH STREET, SUITE 700
BERKELEY, CA 94710-2597
510-450-1999 P

HONEYBEE POOL RENOVATION

CITY OF ROHNERT PARK
1170 GOLF COURSE DRIVE
ROHNERT PARK, CA 94928

LICENSED ARCHITECT
LOREN GACHEN
C-37926
Exp. Date 12/31/22
STATE OF CALIFORNIA

CONSULTANT

VANESSA GARRETT P.E. CE84141 DATE
CITY ENGINEER

REVISION SCHEDULE

NO	DATE	BY	DESCRIPTION
1	11/03/2022		AGENCY PLAN REVIEW
2	12/02/2022		AGENCY PLAN REVIEW

DRAWN: OE / VP CHECKED: OE
DATE: 02/25/2022 SCALE: 1/8" = 1' - 0"
PROJECT NUMBER: 2010200

CODE ANALYSIS

DRAWING NUMBER: A0.5

AGENCY BACKCHECK

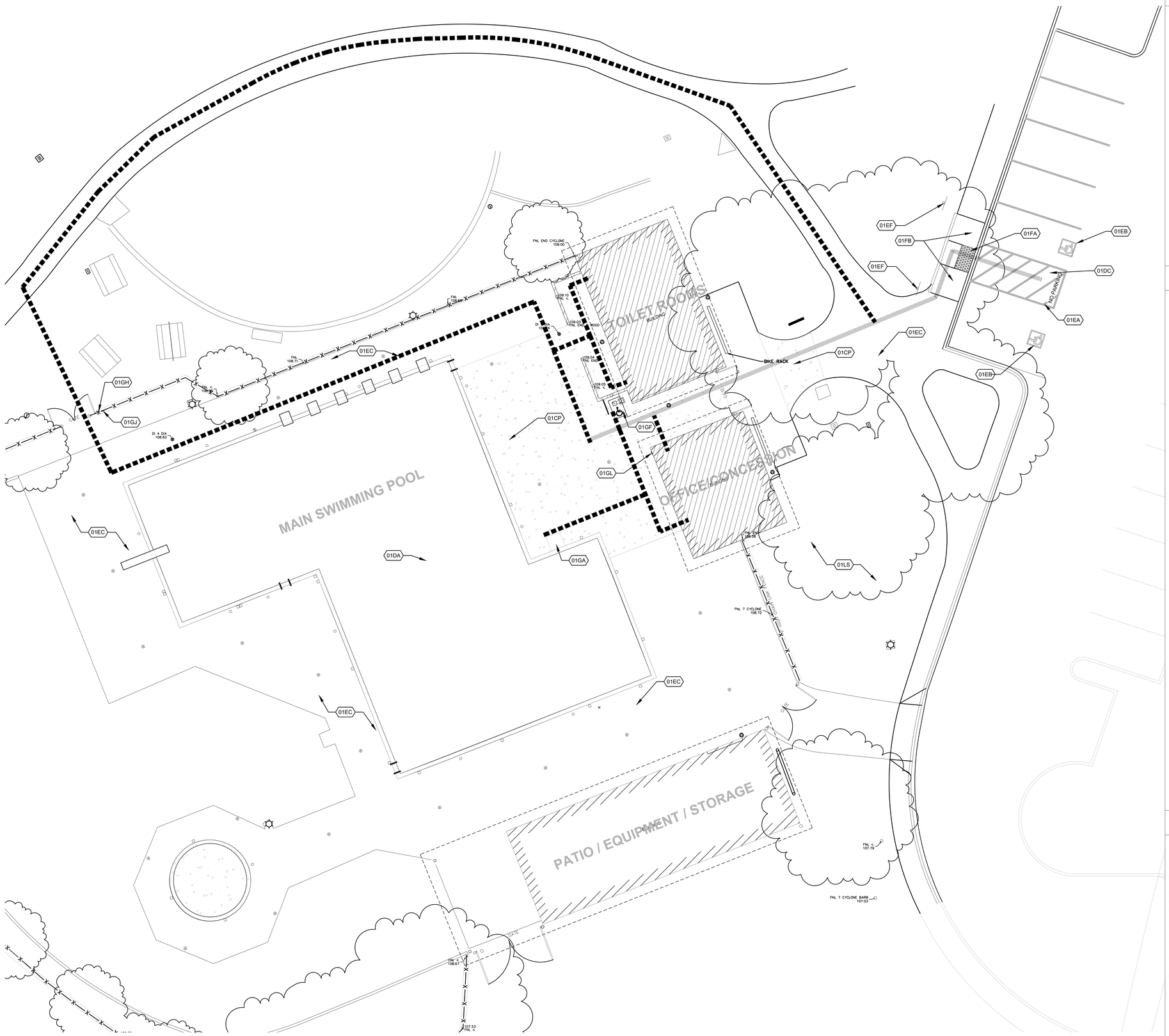

REFERENCE NOTES

AREA OF SCOPE OF WORK

(N) ACCESS. PATH OF TRAVEL

(E) ACCESS. PATH OF TRAVEL

REFERENCE NOTES

- 01CP (N) CONCRETE PAVEMENT, S.C.D.
- 01EC (E) CONCRETE PAVING TO REMAIN
- 01DA POOL AREA, SEE AQUATIC DESIGN DRAWINGS
- 01DC (E) ASPHALT CONCRETE PAVING TO REMAIN
- 01EA (N) PAVEMENT MARKING, BLUE PAINT COLOR
- 01EB (N) ISA PAVEMENT MARKING.
- 01EF (E) ACCESSIBLE PARKING STALL SIGN
- 01FA (E) TACTILE TRUNCATED DOME TO REMAIN
- 01FB (E) ACCESSIBLE CURBED RAMP TO REMAIN
- 01GA ACCESSIBLE POOL CHAIR LIFT. SEE DETAIL 4/2.1
- 01GF ACCESSIBLE DRINKING FOUNTAIN. SEE DETAIL 3/2.1
- 01GH ACCESSIBLE ENTRY SIGN. SEE DETAIL 14/10.1
- 01GJ TACTILE EXIT SIGN. SEE DETAIL 21/10.1
- 01GL DIRECTIONAL SIGN. SEE DETAIL 15/10.1
- 01LS (E) TREES/ LANDSCAPING TO REMAIN

1

BY ARCHITECT OF RECORD

"DESING PROFESSIONAL IN GENERAL RESPOSIBLE CHARGE STATMENT: THE POT IDENTIFIED IN THESE CONSTRUCTION DOCUMENTS IS COMPLIANT WITH THE CURRENT APPLICABLE CALIFORNIA BUILDING CODE ACCESSIBILITY PROVISIONS FOR PATH OF TRAVEL REQUIREMENTS FOR ALTERATIONS, ADDITIONS AND STRUCTURAL REPAIRS. AS PART OF THE DESIGN OF THIS PROJECT, THE POT WAS EXAMINED AND ANY ELEMENTS, COMPONENTS OR PORTIONS OF THE POT THAT WERE DETERMINED TO BE NONCOMPLIANT 1) HAVE BEEN IDENTIFIED AND 2) THE CORRECTIVE WORK NECESSARY TO BRING THEM INTO COMPLIANCE HAS BEEN INCLUDED WITHIN THE SCOPE OF THIS PROJECT'S WORK THROUGH NONCOMPLIANT ELEMENTS, COMPONENTS OR PORTIONS OF THE POT THAT WILL NOT BE CORRECTED BY THIS PROJECT BASE ON VALUATION THRESHOLD LIMITATIONS OR A FINDING OF UNREASONABLE HARDSHIP ARE TO INDICATED IN THESE CONSTRUCTION DOCUMENTS. DURING CONSTRUCTION, IF POT ITEMS WITHIN THE SCOPE OF THE PROJECT REPRESENTED AS CODE COMPLIANT ARE FOUND TO BE NONCONFORMING BEYOND REASONABLE CONSTRUCTION TOLERANCES, THEY SHALL BE BROUGHT INTO COMPLIANCE WITH THE CBC AS A PART OF THIS PROJECT BY MEANS OF A CONSTRUCTIONS CHANGE DOCUMENT."

SITE PLAN | 1/8" = 1' - 0" | 1

PBK
BERKELEY
2600 TENTH STREET, SUITE 700
BERKELEY, CA 94710-2597
510-450-1999 P

HONEYBEE POOL RENOVATION

CITY OF ROHNERT PARK
1170 GOLF COURSE DRIVE
ROHNERT PARK, CA 94928

REGISTERED ARCHITECT
LOREN GACHEN
C-37926
Exp. Date: 12/31/23
STATE OF CALIFORNIA

CONSULTANT

VANESSA GARRETT P.E. CE84141
CITY ENGINEER
DATE

REVISION SCHEDULE

NO	DATE	BY	DESCRIPTION
1	11/03/2022		AGENCY PLAN REVIEW
2	12/02/2022		AGENCY PLAN REVIEW

DRAWN: OE / VP
CHECKED: OE
DATE: 02/25/2022
SCALE: 1/8" = 1' - 0"
PROJECT NUMBER: 2010200

SITE ACCESSIBILITY PLAN

DRAWING NUMBER: A0.6

AGENCY BACKCHECK

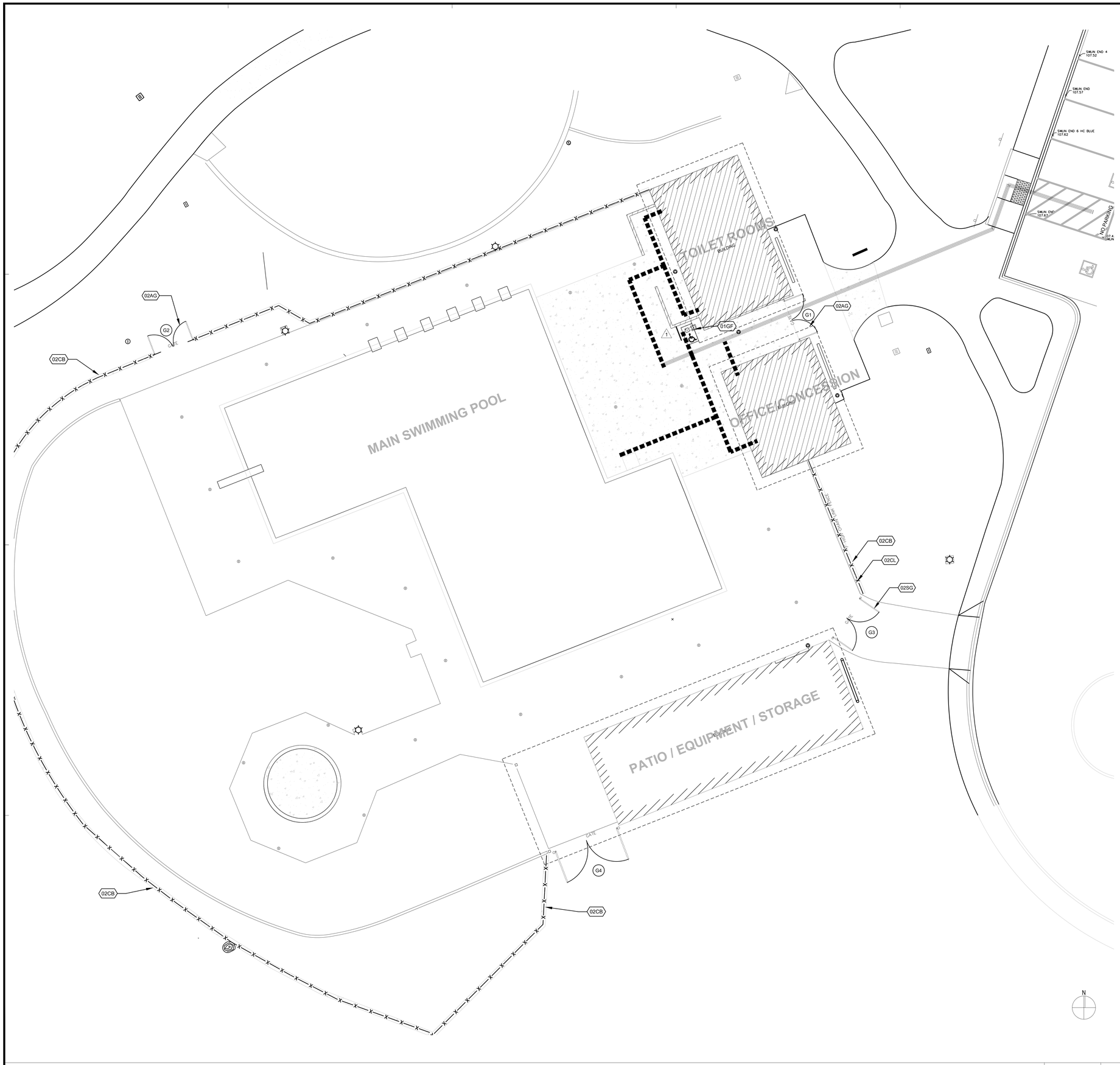

REFERENCE NOTES

AREA OF SCOPE OF WORK

(N) ACCESS. PATH OF TRAVEL

(E) ACCESS. PATH OF TRAVEL

DEMO AND REPLACE WITH (N) VINYL COATED CHAIN LINK FENCE W/ VAINLY SLATS.
DEMO FENCE POST AND FOOTINGS

REFERENCE NOTES

01GF ACCESSIBLE DRINKING FOUNTAIN. SEE DETAIL 3/2.1

02AG ACCESS PEDESTRIAN GATE, SEE DETAIL 23/2.1.

02CB 12" CONCRETE BAND AT FENCE SEE DETAIL 19/2.1

02CL 7 FEET HIGH CHAIN LINK FENCE & GATE, SEE DETAIL 18/2.1.

02SG SERVICE GATE, SEE DETAIL 18/2.1.

GATE SCHEDULE

#	GATE SIZE	DETAIL	SIGNAGE	NOTES	REMARKS
G1	(2) 4'- 0" x 7'- 0"	23/2.1	-	1 , 2	ACCESS GATE
G2	(2) 4'- 0" x 7'- 0"	23/2.1	-	1 , 2	ACCESS GATE
G3	(2) 5'- 0" x 7'- 0"	18/2.1	-	-	SERVICE GATES
G4	(2) 7'- 0" x 7'- 0"	18/2.1	-	-	SERVICE GATES
			1		

NOTES
1. PROVIDE ACCESSIBLE HARDWARE REQUIRED CLEARANCE
2. CUSTODIAN TO OPEN AND CLOSE GATE. GATES SHALL REMAIN OPEN FROM 7:00 AM TO 3:30 PM.

SITE PLAN | 1/8" = 1' - 0" | 1

PBK
BERKELEY
2600 TENTH STREET, SUITE 700
BERKELEY, CA 94710-2597
510-450-1999 P

HONEYBEE POOL RENOVATION

CITY OF ROHNERT PARK
1170 GOLF COURSE DRIVE
ROHNERT PARK, CA 94928

REGISTERED PROFESSIONAL ENGINEER
LOREN GACHEN
C-37926
Exp Date 12/31/23
STATE OF CALIFORNIA

CONSULTANT

VANESSA GARRETT P.E. CE84141
CITY ENGINEER
DATE

REVISION SCHEDULE

NO	DATE	BY	DESCRIPTION
1	11/03/2022		AGENCY PLAN REVIEW
2	12/02/2022		AGENCY PLAN REVIEW

DRAWN: OE / VP
CHECKED: OE
DATE: 02/25/2022
SCALE: 1/8" = 1' - 0"
PROJECT NUMBER: 2010200

FENCING PLAN

DRAWING NUMBER: A0.7

AGENCY BACKCHECK

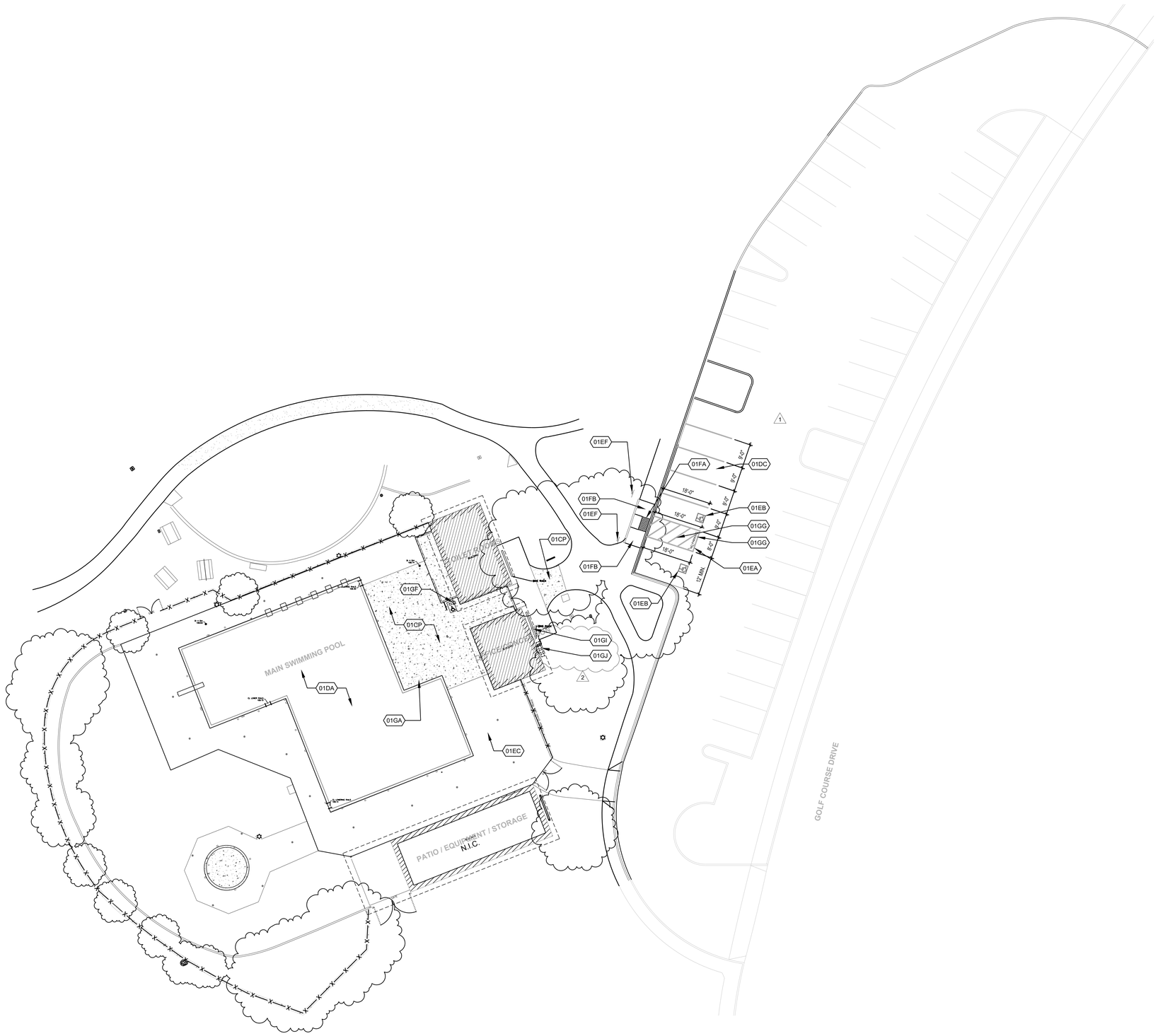

SITE PLAN | 1/16" = 1' - 0" | 1

LEGEND

AREA OF SCOPE OF WORK

(N) CONCRETE PAVING, REF CIVIL DWG

DEMO EXISTING CHAIN-LINK FENCE, CONCRETE FOOTINGS. PROVIDE (N) VINYL COATED CHAIN-LINK FENCE W/ PRIVACY SLATS, REFER DTLS 18 &22/2.1

REFERENCE NOTES

- 01CP (N) CONCRETE PAVEMENT, S.C.D.
- 01EC (E) CONCRETE PAVING TO REMAIN
- 01DA POOL AREA, SEE AQUATIC DESIGN DRAWINGS
- 01DC (E) ASPHALT CONCRETE PAVING TO REMAIN
- 01EA (N) PAVEMENT MARKING, BLUE PAINT COLOR
- 01EB (E) ISA PAVEMENT MARKING, SEE DET.
- 01EF (E) ACCESSIBLE PARKING STALL SIGN
- 01FA (E) TACTILE TRUNCATED DOME TO REMAIN
- 01FB (E) ACCESSIBLE CURBED RAMP TO REMAIN
- 01GA ACCESSIBLE POOL CHAIR LIFT. SEE DETAIL 4/2.1
- 01GF ACCESSIBLE DRINKING FOUNTAIN. SEE DETAIL 3/2.1
- 01GG 4" WHITE HATCHED LINES AT 36" ON CENTER
- 01GH 12" HIGH WHITE LETTERING AS FOLLOWS: NO PARKING 1
- 01GI BIKE RACK TO REMAIN AND PROTECT IN PLACE 2
- 01GJ TRASH AND RECYCLING AREA

PARKING COUNT

2019 CBC TABLE 11B-2002	VISITOR
REGULAR STALLS	39
ACCESS PARKING	1
VAN ACCESS PARKING	1
TOTAL	41

PBK
BERKELEY
2600 TENTH STREET, SUITE 700
BERKELEY, CA 94710-2597
510-450-1999 P

HONEYBEE POOL RENOVATION

CITY OF ROHNERT PARK
1170 GOLF COURSE DRIVE
ROHNERT PARK, CA 94928

LICENSED ARCHITECT
LOREN GACHEN
C-37926
Date 12/9/21
STATE OF CALIFORNIA

CONSULTANT

VANESSA GARRETT P.E. CE84141 DATE
CITY ENGINEER

REVISION SCHEDULE

NO	DATE	BY	DESCRIPTION
1	11/03/2022		AGENCY PLAN REVIEW
2	12/02/2022		AGENCY PLAN REVIEW

DRAWN: OE / VP | CHECKED: OE
DATE: 02/25/2022 | SCALE: 1/8" = 1' - 0"
PROJECT NUMBER: 2010200

SITE PLAN

DRAWING NUMBER: A1.0

AGENCY BACKCHECK

REFERENCE NOTES

DIMENSIONS

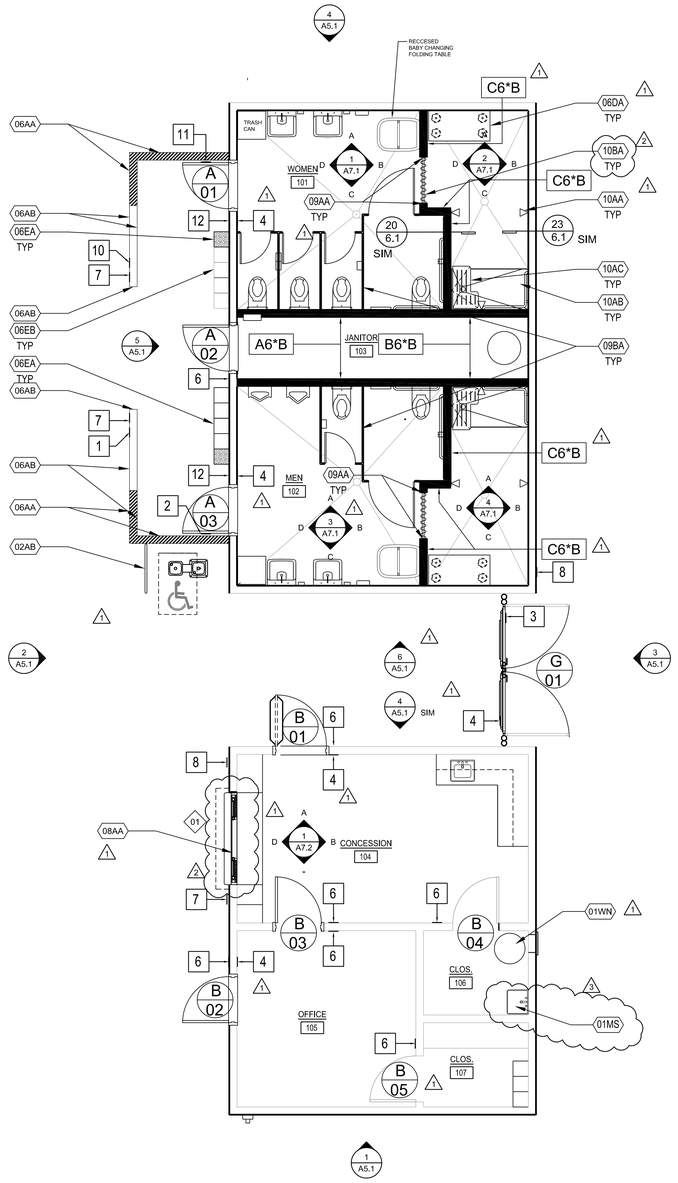

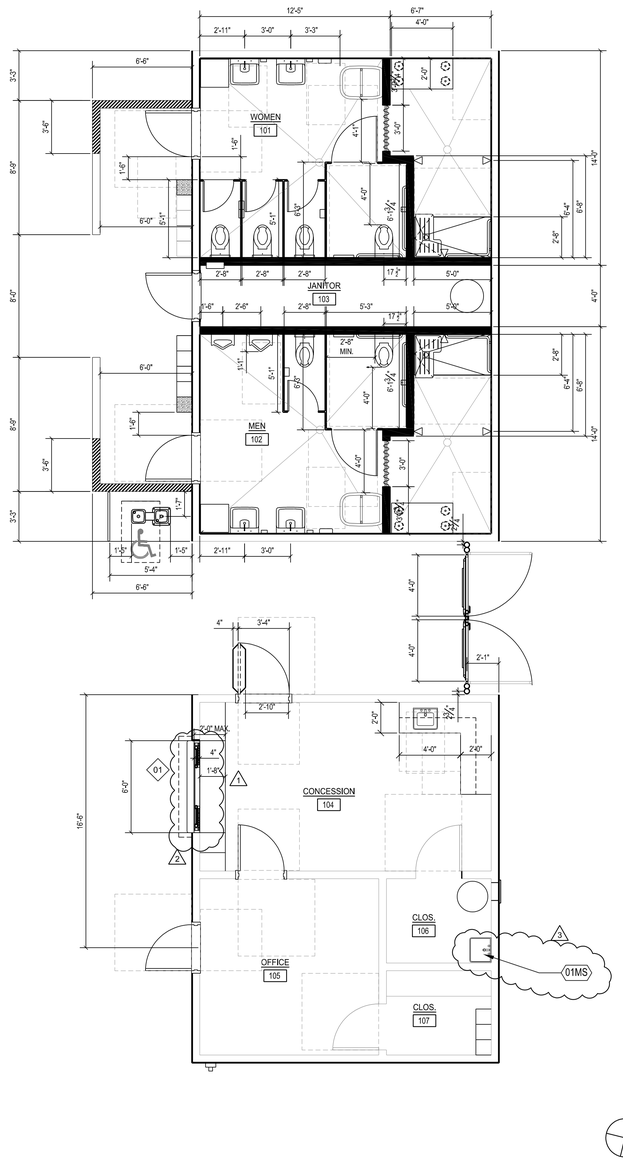

FLOOR PLAN | 1/4" = 1' - 0" | 2

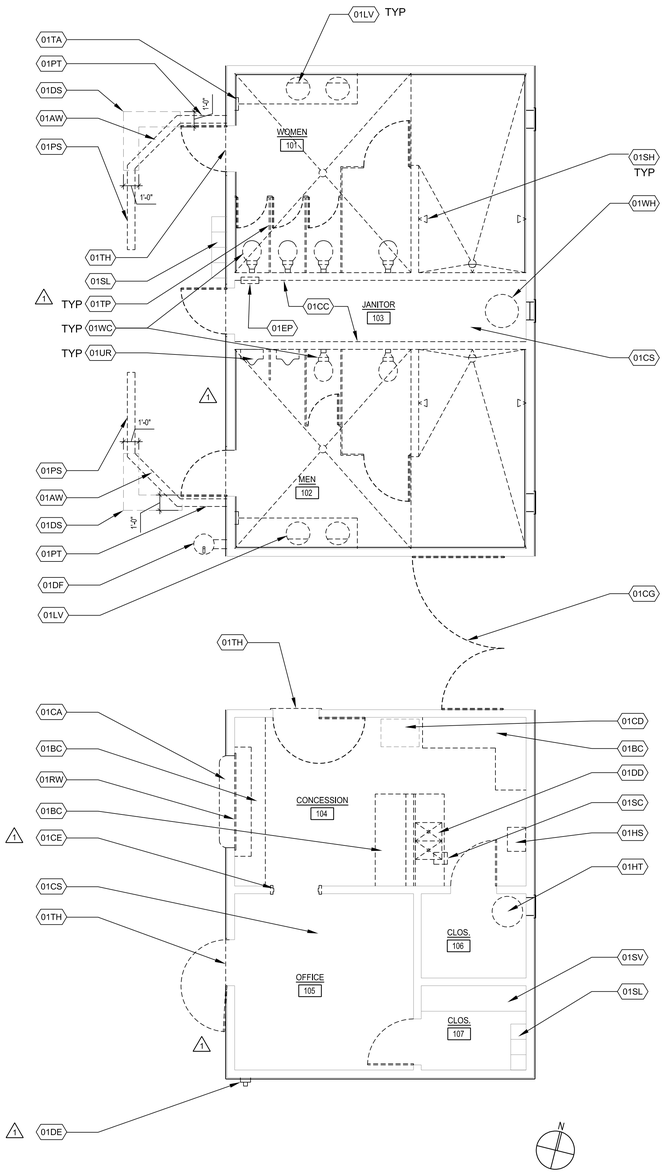

EXISTING DEMOLITION PLAN | 1/4" = 1' - 0" | 1

01AW	DEMO 2X FRAMING, PLYWOOD & SAWCUT CONC. CURB UP TO 6" DEEP
01BC	DEMO CABINET & BASE
01CA	DEMO PLAM COUNTER
01CC	DEMO (E) CONC. CURB 2x4 STUDS, TYP.
01CD	REMOVE (E) FREEZER & DELIVER TO OWNER
01CE	REMOVE (E) DOOR FRAME 1
01CG	DEMO CHAIN LINK GATES, POST, & CONCRETE FOOTINGS
01CS	(E) CONC. SLAB TO REMAIN, TYP.
01DD	DEMO S.S.S DOUBLE SINK & DELIVER TO OWNER
01DE	(E) CAMERA TO REMAIN & PROTECT IN PLACE 1
01DF	DEMO DRINKING FOUNTAIN
01DS	SAWCUT & DEMO CONC. SLAB, TYP.
01EP	DEMO ELEC. PANEL "B", S.E.D.
01HS	DEMO HAND SINK
09BA	RESTROOM PARTITION, REF DTL 6/6.2 1
10BA	CURTAIN ROD W/ SHOWER CURTAIN, REF TO SPEC 2
01HT	DEMO WATER HEATER
01LV	DEMO LAVATORY, CONNECTIONS, COUNTERTOP & SUPPORTS, TYP.
01PS	DEMO PLYWOOD, TRIMS, GSM AT (E) PRIVACY SCREEN (E) 2X FRAMING & CONC. CURB TO REMAIN. REPLACE DAMAGED 2X FRAMING DUE TO DRY ROT 1
01PT	DEMO 2X FRAMING PLYWOOD, TRIMS, GSM AT (E) PRIVACY SCREEN (E) CONC. CURB TO REMAIN
01RW	DEMO (E) ROLL-UP DOOR ASSEMBLY & COORDINATE W/ DTL 12/6.2 TO DEMO SILL ASSEMBLY TO ACCOMMODATE HEIGHT OF COUNTER. 1
01SC	DEMO FLOOR SINK & CAPPING
01SH	DEMO SHOWER HEAD & PIPING CONNECTIONS, TYP.
08AA	WINDOW W/ ROLL-UP DOOR @ CONCESSION, REF DTL 10/8.1
01SL	(E) METAL LOCKER TO REMAIN 1
01SV	(E) WOOD SHELVING TO REMAIN
01TA	DEMO TOILET ACCESSORIES, TYP.
01TH	DEMO DOOR THRESHOLD, TYP. 1
09AA	CONTINUE PORCELAIN TILE FINISH @ JAMB OF OPENING
01TP	DEMO TOILET PARTITION TYP.
01UR	DEMO URINAL & PIPING CONNECTIONS, TYP.
01WC	DEMO WATER CLOSET & PIPING CONNETIONS, TYP.
01WH	EXISTING WATER HEATER TO REMAIN
01WN	(N) WATER HEATER. SEE DWG P2.0
06AA	PRIVACY SCREEN, REF DTL 2/6.2
06AB	PER KEYNOTE 01PS, PROVIDE PRIVACY SCREEN ASSEMBLY ALL SIDES, REF SIM DTL 2/6.2.
02AB	GUARDRAIL AT DRINKING FOUNTAIN, REF DTL 10/2.1
10AA	STD. SHOWER HEAD
10AB	ADA ROLL-IN SHOWER STALL
10AC	ADA ROLL-IN SHOWER SEAT
06DA	ACCESSIBLE WOOD BENCH, REF DTL 3/6.2
06EA	METAL LOCKERS, REF DTL 5/6.2
06EB	(E) METAL LOCKERS TO BE MOUNTED BACK TO ORIGINAL LOCATION. PROVIDE 2X6 PRESSURE TREATED WOOD BLOCK AND CLOSE ALL SIDES, REF SIM DTL 5/6.2 1
01MS	(N) MOP SINK 3

REFERENCE NOTES

C6*B — WOOD STUD WALL, SEE SHEET 6.1 FOR WALL TYPES & REF STRCT DWG 1

10 — SIGNAGE, REF TO SIGNAGE SCHEDULE 10.1

EXTERIOR WALL LEGEND:

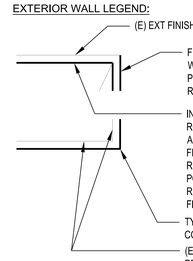

1

FLOOR PLAN LEGEND 1

DEMO EXISTING WALL GYP.BD, FRP & WD TRIM, TYP

(E) WALL TO REMAIN & PROTECT IN PLACE 1

DEMO EXISTING DOOR & DOOR FRAME 1

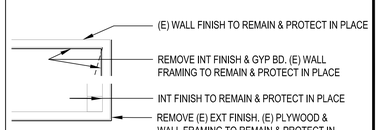

1

NOTE:
1. PATCH HOLES, WHERE OCCURS, WITH FINISH TO MATCH ADJACENT (E) FINISH
2. REF TO EXT ELEVATIONS FOR DEMO OF (E) LOUVERS

DEMO LEGEND

PBK
BERKELEY
2600 TENTH STREET, SUITE 700
BERKELEY, CA 94710-2597
510-450-1999 P

HONEYBEE POOL RENOVATION

CITY OF ROHNERT PARK
1170 GOLF COURSE DRIVE
ROHNERT PARK, CA 94928

LICENSED ARCHITECT LOREN GACHEN C-37926 12/9/21 STATE OF CALIFORNIA

CONSULTANT

VANESSA GARRETT P.E. CE84141 — CITY ENGINEER — DATE

REVISION SCHEDULE

NO	DATE	BY	DESCRIPTION
1	11/03/2022		AGENCY PLAN REVIEW
2	12/02/2022		AGENCY PLAN REVIEW
3	03/01/2023		ADDENDUM 1

DRAWN: OE / VP — CHECKED: OE
DATE: 02/25/2022 — SCALE: 1/4" = 1' -0"
PROJECT NUMBER: 2010200

DEMO & FLOOR PLAN

DRAWING NUMBER: A2.1

AGENCY BACKCHECK

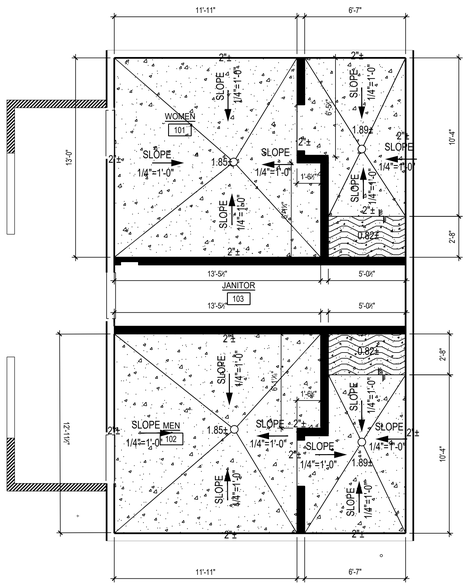

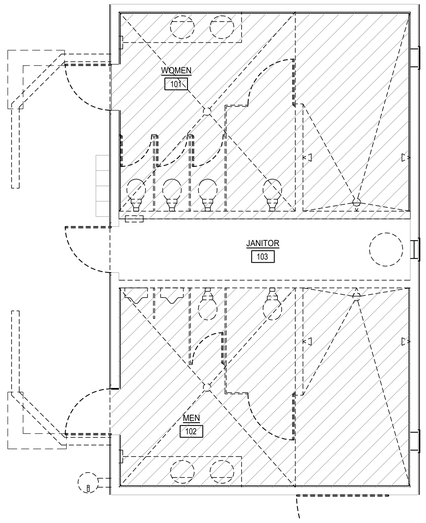

LEGEN

- DEMO EXISTING WALL GYP.BD, FRP & WD TRIM, TYP
- DEMO EXISTING DOOR & FRAME
- SAW CUT & DEMO EXISTING CONC. SLAB INCLUDING FLOOR DRAIN & PLUMBING LINES
- (N) CONCRETE SLAB
- (N) DEPRESS SLAB
- CHANGE IN FLOOR ELEVATION

FLOOR PLAN | 1/4" = 1' - 0" | 2

EXISTING DEMOLITION PLAN | 1/4" = 1' - 0" | 1

PBK
BERKELEY
2600 TENTH STREET, SUITE 700
BERKELEY, CA 94710-2597
510-450-1999 P

HONEYBEE POOL RENOVATION

CITY OF ROHNERT PARK
1170 GOLF COURSE DRIVE
ROHNERT PARK, CA 94928

LICENSED ARCHITECT
LOREN GACHEN
C-37926
12/31/23
STATE OF CALIFORNIA

CONSULTANT

VANESSA GARRETT P.E. CE84141
CITY ENGINEER
DATE

REVISION SCHEDULE

NO	DATE	BY	DESCRIPTION
1	11/03/2022		AGENCY PLAN REVIEW
2	12/02/2022		AGENCY PLAN REVIEW

DRAWN: OE / VP
CHECKED: OE
DATE: 02/25/2022
SCALE: 1/4" = 1' -0"
PROJECT NUMBER: 2010200

SLAB PLAN

DRAWING NUMBER: A2.2

AGENCY BACKCHECK

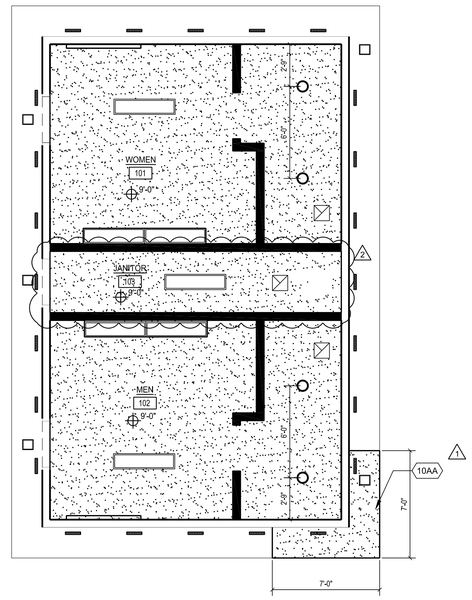

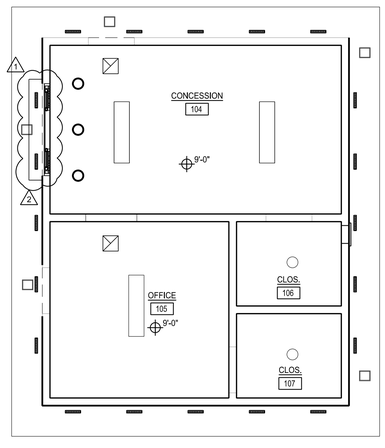

REFLECTED CEILING PLAN | 1/4" = 1' - 0" | 2

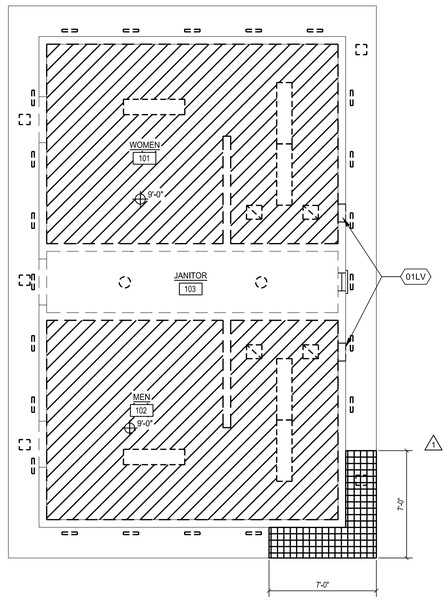

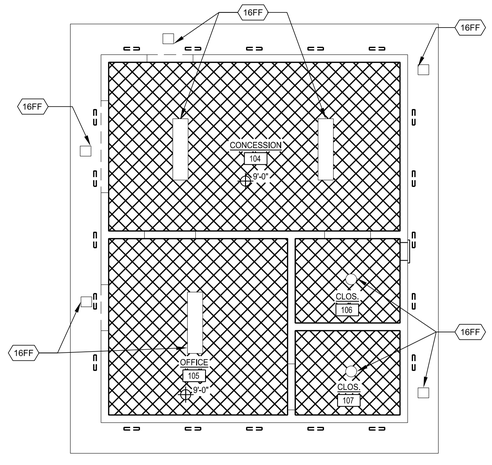

DEMOLITION REFLECTED CEILING PLAN | 1/4" = 1' - 0" | 1

LEGEND DEMO

- DEMO EXISTING LIGHT FIXTURES
- DEMO (E) SUSPENDED CEILING GYP BD
- DEMO (E) EXHAUST FAN
- DEMO (E) INTERIOR LIGHT FIXTURE
- DEMO (E) EXTERIOR LIGHT FIXTURE
- DEMO (E) EXTERIOR SOFFIT
- DEMO PORTION OF SOFFIT TO ACCOMMODATE 2"X12" VENT SCREEN. FIELD VERIFY LOCATION TO AVOID CONFLICT WITH FRAMING. 1

1

NOTE:
1. REMOVE ALL (E) 2" WIDE METAL SCREEN VENT ALONG EXTERIOR SOFFIT FOR BOTH BUILDINGS. PATCH AND REPAIR SOFFIT, AND FINISH TO MATCH ADJACENT FINISH.

LEGEND

- (E) CEILING TO REMAIN
  (N) PAINT FINISH TYP.
- (N) SUSPENDED CEILING GYP BD. 1
  SEE DETAIL 17/ 9.3
- (N) 1' x 4' INTERIOR LIGHT FIXTURE, SEE ELECTRICAL DRAWINGS
- (N) INTERIOR LIGHT FIXTURE, SEE ELECTRICAL DRAWINGS
- (N) EXTERIOR LIGHT FIXTURE, SEE ELECTRICAL DRAWINGS
- (N) CEILING DIFFUSER, SEE MECHANIAL DRAWINGS 1
- 2"X12" VENT SCREEN @ APPROX 4"-0" O.C., FIELD VERIFY LOCATION TO AVOID CONFLICT WITH FRAMING, REF DTL 18/7.1

REFERENCE NOTES

- 01LV — DEMO (E) LOUVER
- 16FF — LIGHT FIXTURE TO REMAIN
- 10AA — SOFFIT @ ROOF TRUSS FASCIA, REF DTL 18/7.1 1

PBK
BERKELEY
2600 TENTH STREET, SUITE 700
BERKELEY, CA 94710-2597
510-450-1999 P

HONEYBEE POOL RENOVATION

CITY OF ROHNERT PARK
1170 GOLF COURSE DRIVE
ROHNERT PARK, CA 94928

LICENSED ARCHITECT
LOREN GACHEN
C-37926
12/31/23
STATE OF CALIFORNIA

CONSULTANT

VANESSA GARRETT P.E. CE84141 — DATE
CITY ENGINEER

REVISION SCHEDULE

NO	DATE	BY	DESCRIPTION
1	11/03/2022		AGENCY PLAN REVIEW
2	12/02/2022		AGENCY PLAN REVIEW

DRAWN: OE / VP	CHECKED: OE
DATE: 02/25/2022	SCALE: 1/4" = 1' -0"
PROJECT NUMBER: 2010200	

DEMO RCP
AND
NEW RCP PLAN

DRAWING NUMBER: A3.1

AGENCY BACKCHECK

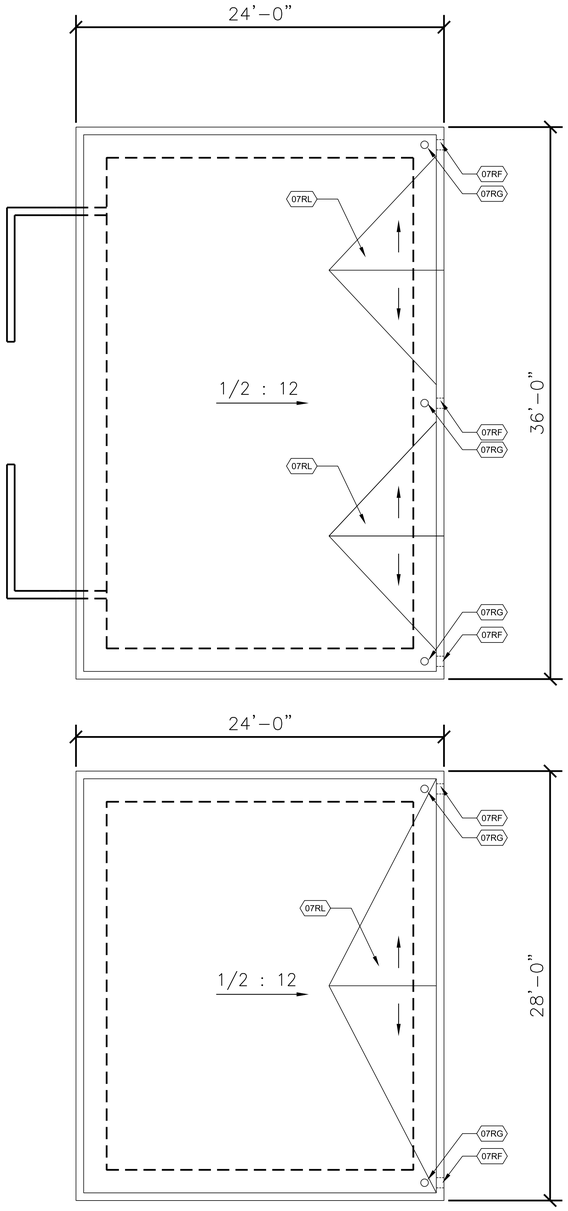

ROOF PLAN | 1/4" = 1' - 0" | 2

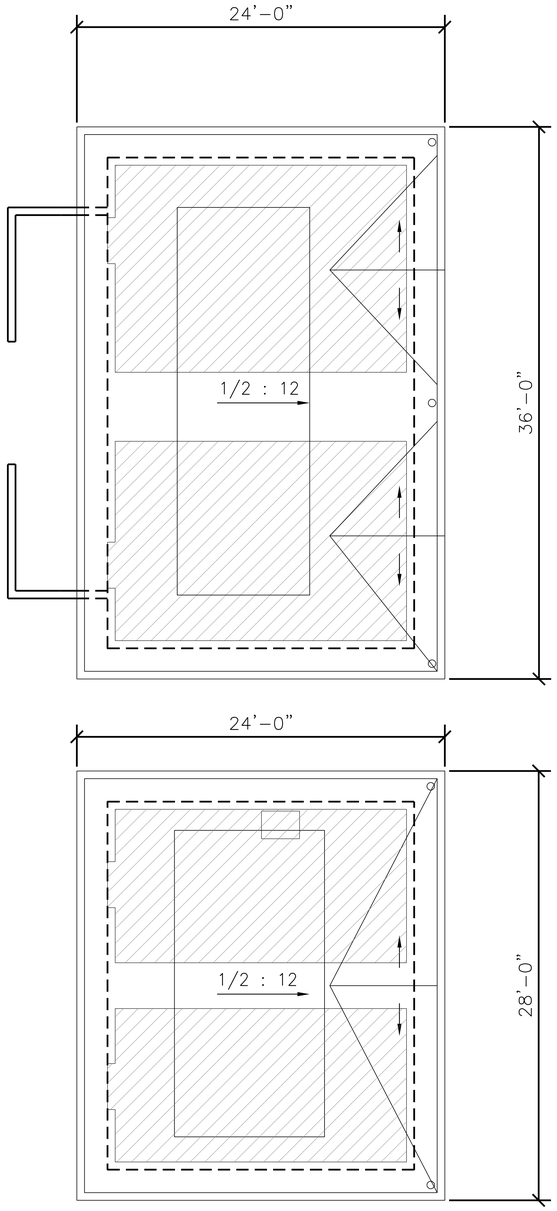

EXISTING ROOF PLAN | 1/4" = 1' - 0" | 1

LEGEND

DEMOLISH HEATING ROOF PANES

ROOF DRAIN

REFERENCE NOTES

07RG ROOF DRAIN. SEE DETAIL 2 & 4/7.1

07RF SHEET METAL OVER FLOW SCUPPER. SEE DETAIL 10/7.1

07RL CRICKET. SEE DETAIL 1/7.1

PBK
BERKELEY
2600 TENTH STREET, SUITE 700
BERKELEY, CA 94710-2597
510-450-1999 P

HONEYBEE POOL RENOVATION

CITY OF ROHNERT PARK
1170 GOLF COURSE DRIVE
ROHNERT PARK, CA 94928

LICENSED ARCHITECT
LOREN GACHEN
C-37926
12/31/23
STATE OF CALIFORNIA

CONSULTANT

VANESSA GARRETT P.E. CE84141 DATE
CITY ENGINEER

REVISION SCHEDULE

NO	DATE	BY	DESCRIPTION

DRAWN: OE / VP | CHECKED: OE
DATE: 02/25/2022 | SCALE: 1/4" = 1' -0"
PROJECT NUMBER: 2010200

EXISTING ROOF PLAN AND NEW ROOF PLAN

DRAWING NUMBER: A4.1

100% CD SUBMITTAL

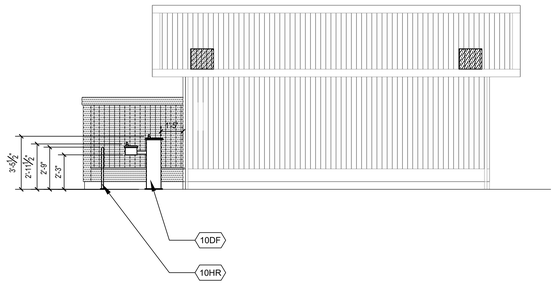

SOUTH ELEVATION TOILET ROOMS | 1/4" = 1' - 0" | 6

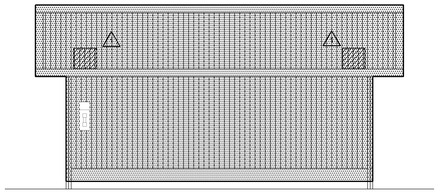

SOUTH ELEVATION OFFICE / CONCESSION | 1/4" = 1' - 0" | 1

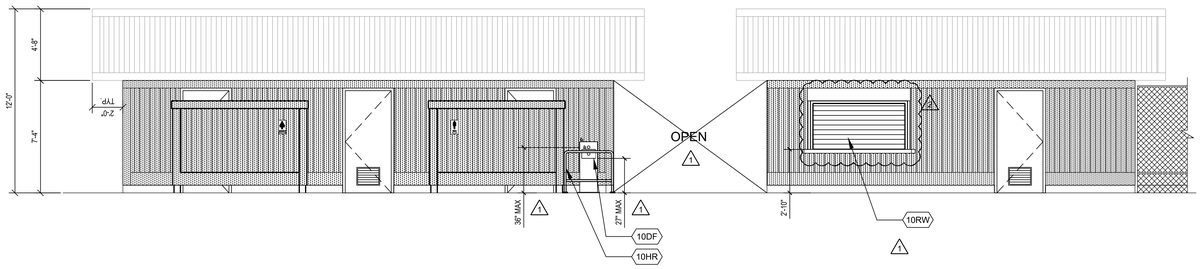

WEST ELEVATION TOILET ROOM & CONCESSION /OFFICE | 1/4" = 1' - 0" | 2

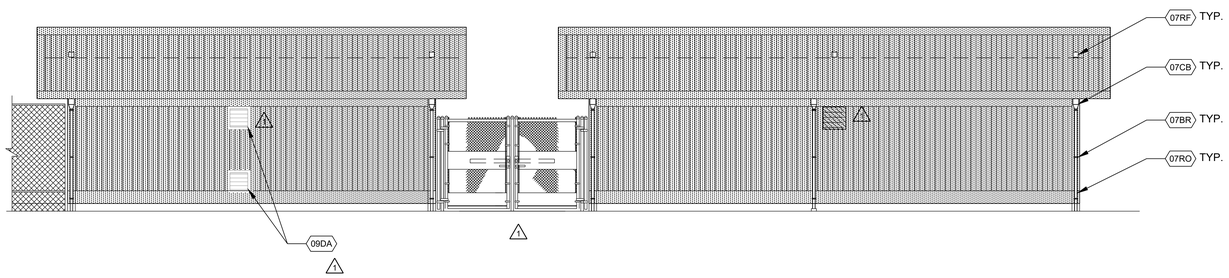

EAST ELEVATION CONCESSION /OFFICE & TOILET ROOMS | 1/4" = 1' - 0" | 3

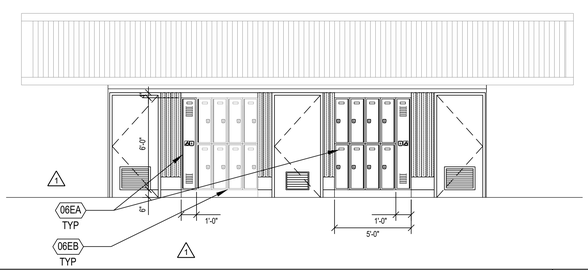

WEST ELEVATION LOCKERS | 1/4" = 1' - 0" | 5

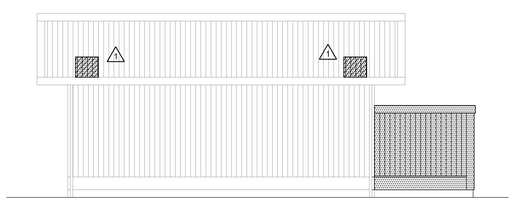

NORTH ELEVATION TOILET ROOMS (CONCESSIONS / OFFICE SIM.) | 1/4" = 1' - 0" | 4

LEGEND

DEMOLISH (E) SIDING & REPLACE WITH (N)FIBER CEMENT SIDING, SEE SPECS.

(E) WD SIDING AND TRIM TO REMAIN.

DEMO (E) LOUVERS, PATCH AND REPAIR WALL, AND FINISH TO MATCH ADJACENT FINISH.

NOTE:
1. DEMO ALL DAMAGED WOOD CEDAR TRIM & REPLACE WITH NEW. PAINT TO MATCH ADJACENT FINISH COLOR.
2. PAINT ALL EXISTING EXTERIOR SIDINGS THAT ARE TO REMAIN TO MATCH ADJACENT FINISH.
3. PAINT ALL EXISTING CEDAR TRIMS THAT ARE TO REMAIN TO MATCH ADJACENT FINISH.

REFERENCE NOTES

- 01RW (E) STEEL ROLL-UP WINDOW TO REMAIN
- 06EA METAL LOCKERS, REF DTL 5/6.2
- 06EB (E) METAL LOCKERS TO BE MOUNTED BACK TO ORIGINAL LOCATION. PROVIDE 2X6 PRESSURE TREATED WOOD BLOCK AND CLOSE ALL SIDES, REF SIM DTL 5/6.2
- 07RO METAL DOWNS SPOUT
- 07RF SHEET METAL OVER FLOW SCUPPER SEE DETAIL 10/7.1
- 07BR DOWNSPOUTS BRACKET, REF DTL 13/7.1
- 07CB COLLECTOR BOX, REF DTL 16/7.1
- 10DF HIGH - LOW DRINKING FOUNTAIN, REF DTL 3/2.1
- 10RW ROLL-UP DOOR, REF DTL 10/8.1
- 10HR (N) GUARDRAIL , SEE DETAIL 10/2.1
- 09DA (E) LOUVER TO REMAIN AND PROTECT IN PLACE

PBK
BERKELEY
2600 TENTH STREET, SUITE 700
BERKELEY, CA 94710-2597
510-450-1999 P

HONEYBEE POOL RENOVATION

CITY OF ROHNERT PARK
1170 GOLF COURSE DRIVE
ROHNERT PARK, CA 94928

LICENSED ARCHITECT
LOREN GACHEN
C-37926
Exp 12/31/23
STATE OF CALIFORNIA

CONSULTANT

VANESSA GARRETT P.E. CE84141 — DATE
CITY ENGINEER

REVISION SCHEDULE

NO	DATE	BY	DESCRIPTION

DRAWN: OE / VP	CHECKED: OE
DATE: 02/25/2022	SCALE: 1/4" = 1' -0"
PROJECT NUMBER: 2010200	

EXTERIOR ELEVATIONS

DRAWING NUMBER: A5.1

100% CD SUBMITTAL

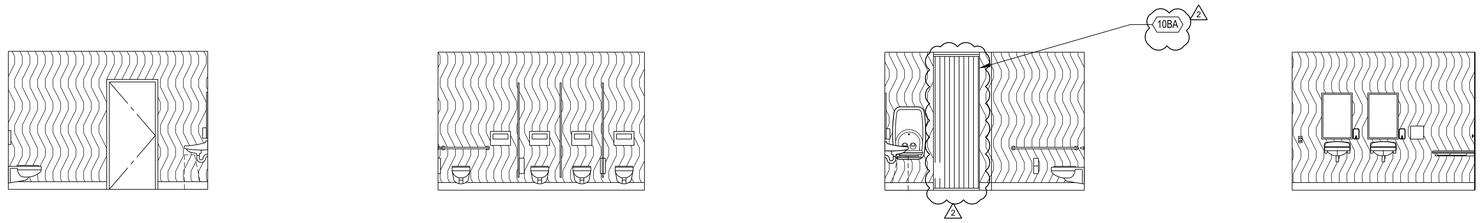

1 FOR MOUNTING HEIGHTS REF 4/10.2

WOMEN 101 INTERIOR ELEVATIONS | 1/4" = 1' - 0" | 1

1 FOR MOUNTING HEIGHTS REF 4/10.2

WOMEN'S 101 SHOWER AREA INTERIO ELEVATIONS | 1/4" = 1' - 0" | 2

1 FOR MOUNTING HEIGHTS REF 4/10.2

MEN 102 INTERIO ELEVATIONS | 1/4" = 1' - 0" | 3

1 FOR MOUNTING HEIGHTS REF 4/10.2

MEN'S 102 SHOWER AREA INTERIO ELEVATIONS | 1/4" = 1' - 0" | 4

LEGEND

FIBER REINFORCE PLASTIC, REF DTL 16/6.2. REF DTL 5/- FOR OUTSIDE CORNER SCHLUTER

12" x 24" PORCELAIN TILE. REF DTL 5/- FOR OUTSIDE CORNER SCHLUTER

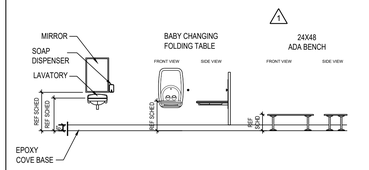

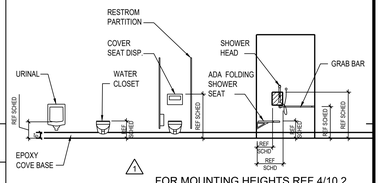

FOR MOUNTING HEIGHTS REF 4/10.2

SHOWER AREA PLAN

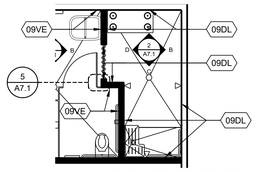

WALL FINISH AT SHOWER AREA WOMEN 101 & MEN 102 SIM

REFERENCE NOTES

09DL 12" x 24" PORCELAIN TILE TO TOP OF CEILING

09VE FIBER REINFORCED PLASTIC TO TOP OF CEILING

10BA CURTAIN ROD W/ SHOWER CURTAIN, REF TO SPEC 2

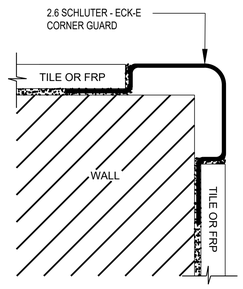

1 OUTSIDE CORNER DETAIL | NTS | 5

PBK
BERKELEY
2600 TENTH STREET, SUITE 700
BERKELEY, CA 94710-2597
510-450-1999 P

HONEYBEE POOL RENOVATION

CITY OF ROHNERT PARK
1170 GOLF COURSE DRIVE
ROHNERT PARK, CA 94928

LICENSED ARCHITECT
LOREN GACHEN
C-37926
Exp Date 12/31/23
STATE OF CALIFORNIA

CONSULTANT

VANESSA GARRETT P.E. CE84141
CITY ENGINEER
DATE

REVISION SCHEDULE

NO	DATE	BY	DESCRIPTION
1	11/03/2022		AGENCY PLAN REVIEW
2	12/02/2022		AGENCY PLAN REVIEW

DRAWN: OE / VP
CHECKED: OE
DATE: 02/25/2022
SCALE: 1/4" = 1' -0"
PROJECT NUMBER: 2010200

INTERIOR ELEVATIONS

DRAWING NUMBER: A7.1

AGENCY BACKCHECK

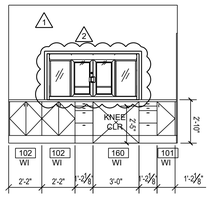

D

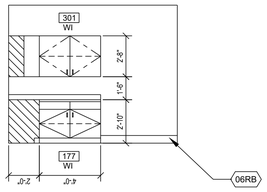

B

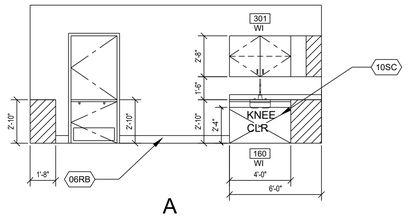

A

CONCESSION 104 INTERIOR ELEVATIONS | 1/4" = 1' - 0" | 1

REFERENCE NOTES

10SC ACCESSIBLE SINK CABINET. SEE DETAIL 5/6.1

06RB 6" RUBBER BASE

PBK
BERKELEY
2600 TENTH STREET, SUITE 700
BERKELEY, CA 94710-2597
510-450-1999 P

HONEYBEE POOL RENOVATION

CITY OF ROHNERT PARK
1170 GOLF COURSE DRIVE
ROHNERT PARK, CA 94928

LICENSED ARCHITECT
LOREN GACHEN
C-37926
Exp Date 12/31/23
STATE OF CALIFORNIA

CONSULTANT

VANESSA GARRETT P.E. CE84141 — DATE
CITY ENGINEER

REVISION SCHEDULE

NO	DATE	BY	DESCRIPTION

DRAWN: OE / VP	**CHECKED:** OE
DATE: 02/25/2022	**SCALE:** 1/4" = 1' -0"
PROJECT NUMBER: 2010200	

INTERIOR ELEVATIONS

DRAWING NUMBER: A7.2

100% CD SUBMITTAL

ROOM FINISH SCHEDULE

ROOM #	ROOM NAME	FLOOR SUBSTRATE	BASE FIN	WALL MATERIAL N	WALL MATERIAL E	WALL MATERIAL S	WALL MATERIAL W	CEILING MTL	CEILING HT	WNSCOT MTL	WNSCOT HT	FINISHES FLOOR	FINISHES WALLS	FINISHES CEILING	REMARKS
101	WOMEN	CONC	ECB	GYP	GYP	GYP	GYP	GYP	9'-0"	-	-	EPY	FRP	PNT	1
	WOMEN SHOWER AREA	CONC	ECB	GYP	GYP	GYP	GYP	GYP	9'-0"	-	-	EPY 2	PT	PNT	1 & 2
102	MEN	CONC	ECB	GYP	GYP	GYP	GYP	GYP	9'-0"	-	-	EPY	FRP	PNT	1
	MEN SHOWER AREA	CONC	ECB	GYP	GYP	GYP	GYP	GYP	9'-0"			EPY 2	PT	PNT	1 & 2
103	JANITOR	(ESC)	ECB 2	GYP	GYP 2	GYP	GYP	GYP	9'-0" 2	-	-	EPY 2	PNT	PNT 2	1 1
104	CONCESSION	(E)	RB	(E)	(E)	(E)	(E)	GYP	9'-0"	-	-	SC	PNT	PNT	1
105	OFFICE	(E)	RB	(E)	(E)	(E)	(E)	GYP	9'-0"	-	-	SC	PNT	PNT	1
106	CLOSET	(E)	(E)	(E)	(E)	(E)	(E)	GYP	9'-0"	-	-	SC	PNT	PNT	1
107	CLOSET	(E)	(E)	(E)	(E)	(E)	(E)	GYP	9'-0"	-	-	SC	PNT	PNT	1

DOOR AND FRAME SCHEDULE

DOOR MARK	DOOR NOMINAL SIZE W PER LEAF	DOOR NOMINAL SIZE HT	DOOR NOMINAL SIZE THK	DOOR MTL	DOOR TYPE	DOOR GLASS	DOOR DETAIL	DOOR LOUVER W	DOOR LOUVER HT	FRAME MTL	FRAME TYPE	FRAME GLASS	FRAME DETAILS JAMB	FRAME DETAILS HEAD	FRAME DETAILS THRSHLD	FRAME DETAILS OTHER	HDWE GROUP	FIRE RATING	REMARKS
A-01	3'-0"	7'-0"	0'-1 3/4"	HM	B	1 -	-	24"	18"	HM	1	-	3/8.1 SIM	3/8.1	4/8.1	-	01	NR	24" x 18" OA DOOR LOUVER
A-02	3'-0"	7'-0"	0'-1 3/4"	HM	B	-	-	14"	18"	HM	1	-	3/8.1 SIM	3/8.1	4/8.1	-	02	NR	14" x 18" OA DOOR LOUVER
A03	3'-0"	7'-0"	0'-1 3/4"	HM	B	1 -	- 1	24"	18"	HM	1	-	3/8.1 SIM	3/8.1	4/8.1	-	01	NR	24" x 18" OA DOOR LOUVER
																1			-
B-01	3'-0"	7'-0"	0'-1 3/4"	HM	C	-	-	14"	18"	HM	2	-	3/8.1 SIM	3/8.1	4/8.1	-	03	NR	-
B-02	3'-0"	7'-0"	0'-1 3/4"	HM	B	1 -	- 1	14"	18"	HM	1	-	3/8.1 SIM	3/8.1	4/8.1	-	04	NR	14" x 18" OA DOOR LOUVER
B-03	3'-0"	7'-0"	0'-1 3/4"	WD	D	LAM	-	-	-	WD	1	-	3/8.1 SIM	3/8.1	4/8.1	-	05	NR	
B-04	3'-0"	7'-0"	0'-1 3/4"	WD	D	LAM	-	-	-	WD	1	-	7/8.1 SIM	7/8.1	8/8.1	-	05	NR	1
B-05	3'-0"	7'-0"	0'-1 3/4"	WD	D	LAM	-	-	-	WD	1	-	7/8.1 SIM	7/8.1	8/8.1	-	05	NR	
																		1	

ROOM FINISH MATERIALS KEY

CONC - CONCRETE

PT - PORCELAIN TILE:
- EXT WALL CONDITION - REF DTL 17/6.1
- INT WALL CONDITION - WALL TYPE PER PLAN

ECB - EPOXY COVE BASE 1

EPY - EPOXY RESIN
- @ SHOWER AREAS - PROVIDE HYDRIFLEX EQ - DECORATIVE QUARTZ BROADCAST SYSTEM BY DUR-A-FLEX OR APPROVED EQUAL.

1

- SPECIFIED EPOXY FLOOR ARE NON-SLIP. SEE SPECIFICATION SECTION 09 67 26

1

GYP - GYPSUM BOARD

PNT - PAINT

FRP - FIBER REINFORCED PLASTIC:
- EXT WALL CONDITION - REF DTL 18/6.1
- INT WALL CONDITION - WALL TYPE PER PLAN

RB - RUBBER BASE

WD - WOOD 1

(E) - EXISTING

(ESC) - EXISTING SEALED CONCRETE 2

SC - SEALED CONCRETE

REMARKS REFERENCE SCHEDULE

1. REFER TO PAINTING SPECIFICATIONS FOR COLOR SCHEDULE
2. 12" x 24" PORCELAIN TILE

DOOR & FRAME MATERIALS KEY

HM - HOLLOW METAL

LAM - LAMINATED GLASS

SS - STAINLESS STEEL

TG - TEMPERED GLASS

WD - WOOD

WG - WIRE GLASS

(E) - EXISTING

DOOR AND FRAME TYPES

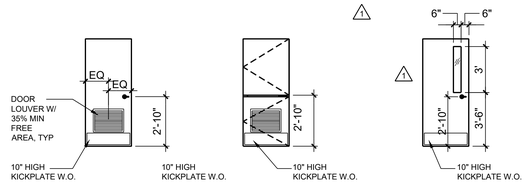

DOOR TYPE B DOOR TYPE C DOOR TYPE D

1

NOTE:
1.- OPERABLE PARTS OF DOORS AND GATES SHALL BE 34" MIN. TO 44" MAX. A.F.F.
2.- OPERABLE PARTS ON DOORS AND GATES SHALL BE OPERABLE WITH ONE HAND AND SHALL NOT REQUIRE TIGHT GRASPING, PINCHING OR TWISTING OF THE WRIST. THE FORCE REQUIRED TO ACTIVATE OPERABLE PARTS SHALL BE 5 POUNDS MAXIMUM.

DOOR TYPE 1 FRAME TYPE 2 (DUTCH DOOR)

SEE SPECIFICATIONS FOR DOOR HARDWARE

ROOM FINISH MATERIALS KEY

ROOM FINISH SCHEDULE COLUMN REFERENCE GUIDE

1. ROOM LOCATION: LOCATION OF ROOM IN BUILDING COMPLEX, I.E., FIRST FLOOR, THIRD FLOOR, AREA A, AREA B, BUILDING A, BUILDING B, ETC.
2. ROOM NUMBER: SPECIFIC NUMBER ASSIGNED TO INDIVIDUAL ROOM.
3. ROOM NAME: DESIGNATES SPECIFIC USAGE OF SPACE.
4. FLOOR MATERIAL: DESIGNATES BASE FLOOR MATERIAL, I.E., LINO-LINOLEUM, CPT-CARPET TILE, SV-SHEET VINYL (HOMOGENEOUS) CONC.-CONCRETE, ETC.
5. BASE FINISH: DESIGNATES BASE FINISH, I.E., RESIL - RESILIENT, CER - CERAMIC TILE, CTS - CERAMIC TILE SANITARY COVE, ETC.
6. WALL MATERIALS: DESIGNATES MATERIAL FROM WHICH WALLS ARE CONSTRUCTED, I.E., CONC - CONCRETE, CMU - CONCRETE MASONRY UNIT, GYP - GYPSUM BOARD, ETC. NUMERICAL DESIGNATION OF WALL REFERS TO WALL NUMBER ORIENTATION DEFINED BY AREA IDENTITY SHOWN ON PLAN.
7. CEILING MATERIAL AND HEIGHT: DESIGNATES MATERIAL FROM WHICH CEILING IS CONSTRUCTED, I.E., G.B. - GYPSUM BOARD, ACT - ACOUSTICAL CEILING TILE, S.G. COAT-SEMI-GLOSS COATING, F.A. PNT-FACTORY APPLIED PAINT, PBD V.- PARTICLE BOARD VENEER, M.F.-MINERAL FIBER, AND THE HEIGHT OF THE FINISHED CEILING FROM THE FINISHED FLOOR LINE EXPRESSED IN FEET AND INCHES.
8. WAINSCOT MATERIAL AND HEIGHT: DESIGNATES ANY WAINSCOTING MATERIAL, I.E., CER - CERAMIC TILE, QT- QUARRY TILE, VWC - VINYL WALLCOVERING, ETC., AND HEIGHT OF WAINSCOT MATERIAL FROM FINISHED FLOOR LINE EXPRESSED IN FEET AND INCHES.
9. FINISHES: DESIGNATES FINAL FINISH OF FLOOR, WALL & CEILING, I.E., CPT - CARPET TILE, PNT - PAINT, VCT - VINYL COMPOSITION TILE, FRP - FIBER REINFORCED PLASTIC, SLD - SEALED, VWC - VINYL WALL COVERING, FBC-FIBER CEMENT BOARD, LINO-LINOLEUM
10. REMARKS: DESIGNATES OR REFERENCES SPECIAL, UNUSUAL OR ABSTRACT CONDITIONS WHICH EXIST AND ARE NOT COVERED IN SCHEDULE ITEMS 1 THRU 9. REFER TO REMARKS REFERENCE SCHEDULE FOR ALPHANUMERICAL DESIGNATION.

PBK
BERKELEY
2600 TENTH STREET, SUITE 700
BERKELEY, CA 94710-2597
510-450-1999 P

HONEYBEE POOL RENOVATION

CITY OF ROHNERT PARK
1170 GOLF COURSE DRIVE
ROHNERT PARK, CA 94928

LICENSED ARCHITECT
LOREN GACHEN
C-37926
12/9/21
STATE OF CALIFORNIA

CONSULTANT

VANESSA GARRETT P.E. CE84141
CITY ENGINEER
DATE

REVISION SCHEDULE

NO	DATE	BY	DESCRIPTION
1	11/03/2022		AGENCY PLAN REVIEW
2	12/02/2022		AGENCY PLAN REVIEW

DRAWN:	CHECKED:
DATE: 02/25/2022	SCALE:
PROJECT NUMBER: 2010200	

ROOM FINISH SCH. AND DOOR & FRAME SCH.

DRAWING NUMBER: A8.1

AGENCY BACKCHECK

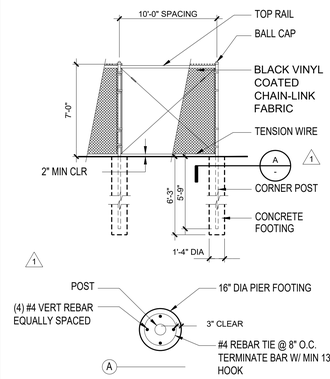

CHAIN-LINK FENCE 1/4"=1'-0" 22

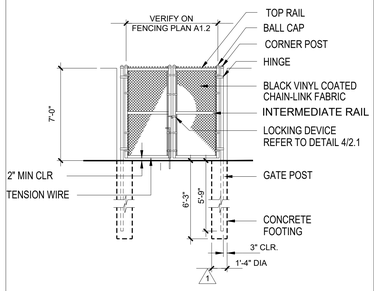

NOTE:
1.- CHAIN LINK OPENINGS ARE TO BE NO GREATER THAN 1 3/4 INCHES MEASURED HORIZONTALLY

FILE/CSI NUMBER: REVISION DATE: JOB NUMBER:

CHAIN-LINK GATE 1/4"=1'-0" 18

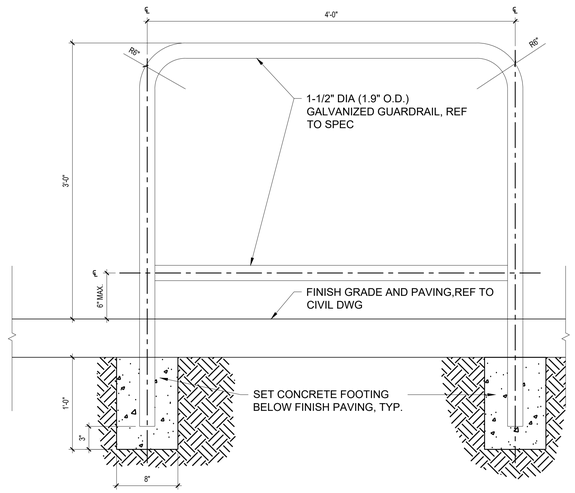

GUARDRAIL AT DRINKING FOUNTAIN 1-1/2" = 1' - 0" 10

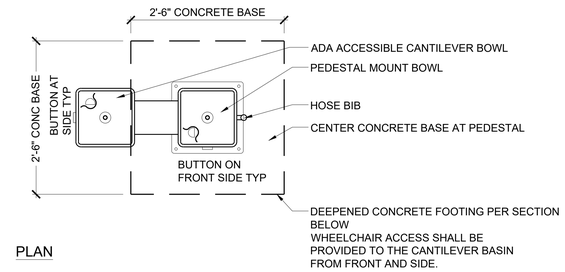

PLAN

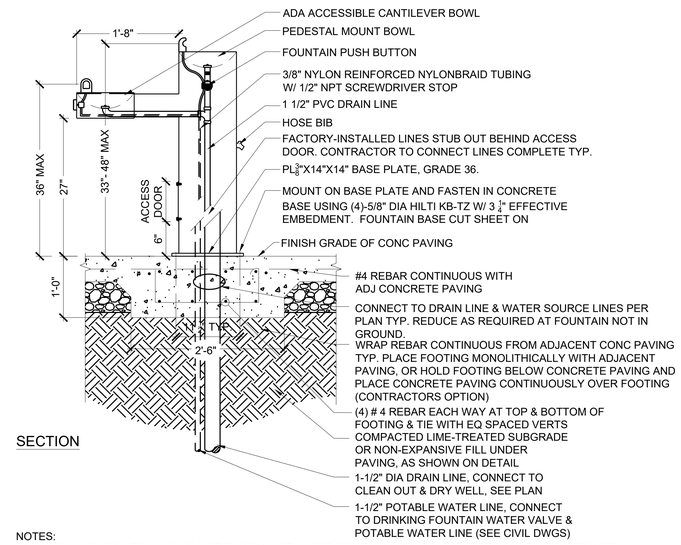

SECTION

NOTES:
1. DRINKING FOUNTAIN: HAWS MODEL #3500 WITH HOSE BIB, BLACK COLOR. SURFACE MOUNT WITH MTG.3500 MOUNTING PLATE KIT. AVAILABLE FROM ROSS RECREATION (707) 538-3800.
2. MEETS ADA REGULATIONS.
3. INSTALLATION TO BE COMPLETED IN ACCORDANCE WITH MANUFACTURER'S SPECIFICATIONS; INSTALL COMPLETE.
4. SEE INSTALLATION DETAILS, MATERIALS PLANS, AND CIVIL DRAWINGS FOR WATER CONNECTIONS AND NOTES.
5. SUBMIT SHOP DRAWINGS.
6. THIS DETAIL IS PROTOTYPICAL. SEE MATERIALS PLANS AND SPECIFY THE DIRECTION OF CANTILEVER BASIN AND BASIN BUTTONS BASED UPON THE PLANS WHEN ORDERING.
7. CHLORINATE DRINKING FOUNTAIN WATER LINE PRIOR TO APPROVAL. VERIFICATION BY IOR REQUIRED.

ACCESSIBLE DRINKING FOUNTAIN 1" = 1' - 0" 3

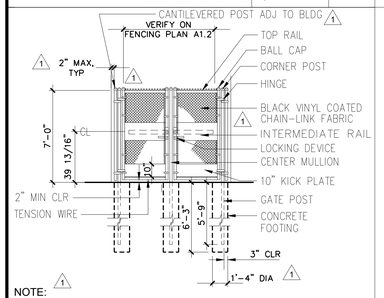

NOTE:
1.- OPERABLE PARTS OF DOORS AND GATES SHALL BE 42" MIN. TO 44" MAX. A.F.F.
2.- OPERABLE GATES SHALL BE EQUIPPED WITH SELF-CLOSE AND SELF LATCH DEVICES.
3.- OPERABLE PARTS ON DOORS AND GATES SHALL BE OPERABLE WITH ONE HAND AND SHALL NOT REQUIRE TIGHT GRASPING, PINCHING OR TWISTING OF THE WRIST. THE FORCE REQUIRED TO ACTIVATE OPERABLE PARTS SHALL BE 5 POUNDS MAXIMUM.

ADA GATE @ BIKE RACK FENCING 1/4"=1'-0" 23

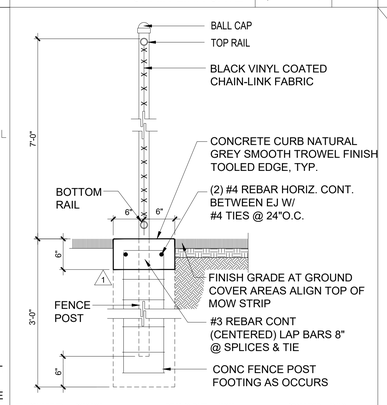

FILE/CSI NUMBER: 002800-00085 REVISION DATE: 07/06/00 JOB NUMBER: 8818000

CONCRETE BAND @ FENCE 1"=1'-0" 19

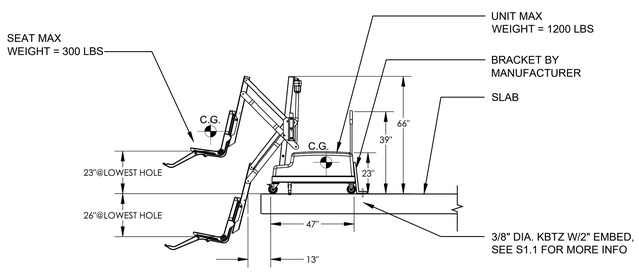

POOL CHAIR ANCHORAGE DETAIL NTS 4

PBK
BERKELEY
2600 TENTH STREET, SUITE 700
BERKELEY, CA 94710-2597
510-450-1999 P

HONEYBEE POOL RENOVATION

CITY OF ROHNERT PARK
1170 GOLF COURSE DRIVE
ROHNERT PARK, CA 94928

REGISTERED PROFESSIONAL ENGINEER
LOREN GACHEN
C-37926
Exp. Date: 12/31/23
STATE OF CALIFORNIA

CONSULTANT

VANESSA GARRETT P.E. CE84141
CITY ENGINEER
DATE

REVISION SCHEDULE

NO	DATE	BY	DESCRIPTION
1	11/03/2022		AGENCY PLAN REVIEW
2	12/02/2022		AGENCY PLAN REVIEW

DRAWN: VP CHECKED: OE
DATE: 02/25/2022 SCALE: NONE
PROJECT NUMBER: 2010200

SITE DETAILS

DRAWING NUMBER: 2.1

AGENCY BACKCHECK

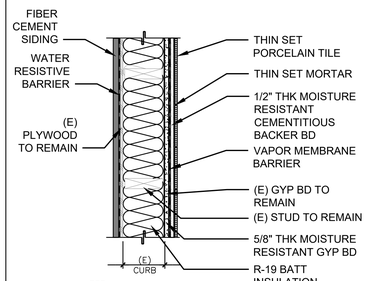

EXTERIOR WALL W/ PORCELAIN TILE — 1" = 1'-0" — 17

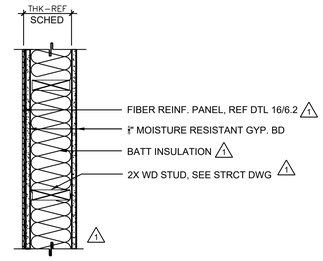

STUD SIZE	WALL THK	FIRE RATING (CBC/UL/GA LISTING) O HR	1 HR	2 HR	REMARKS
~~4~~	~~4 5/8~~	~~A4**~~	~~(UL U329)~~	—	~~A*A~~
6	6 3/8	A6**	(UL U329)	—	A6*B 1
~~8~~	~~8 3/8~~	~~A8**~~	~~(UL U329)~~	—	~~A*B~~

PLAN INDICATION

NON RATED

REMARKS SCHEDULE
A. R-11 BATT INSUL
B. R-19 BATT INSUL

NOTES:
1. REF FIN SCHED FOR GYP BD FIN
2. STUDS SPACED 16" OC
3. ALL WALLS FULL HGT

* OPTIONAL CHARACTER

FILE/CSI NUMBER: D09051-0020 REVISION DATE: 11/12/02 JOB NUMBER: 8816000

WALL TYPE A — 1"=1'-0" — 9

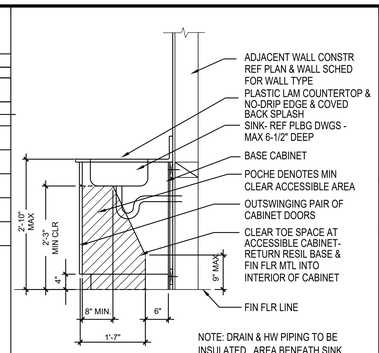

ACCESSIBLE SINK CABINET — 3/4"=1'-0" — 5

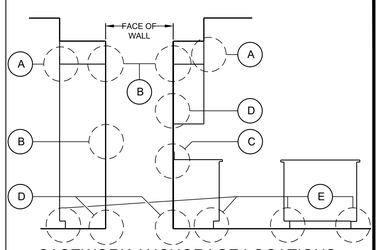

CASEWORK ANCHORAGE LOCATIONS

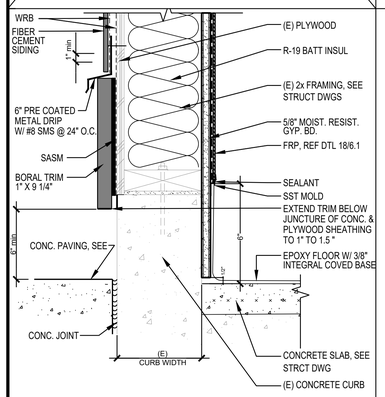

EXT WALL BASE W/ FRP — 3"-1'-0" — 22

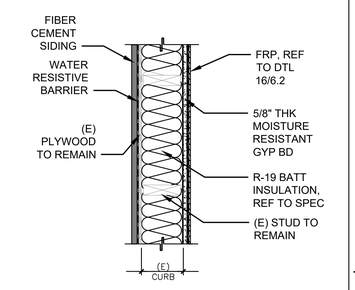

EXTERIOR WALL W/ FRP — 1" = 1'-0" — 18

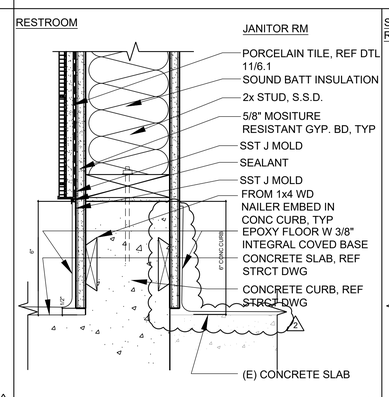

INT FURRING WALL BASE @ RESTROOM — 3"=1'-0" — 15

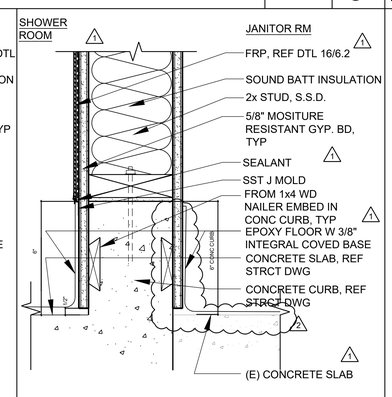

INT FURRING WALL BASE @ SHOWER RM — 3"=1'-0" — 10

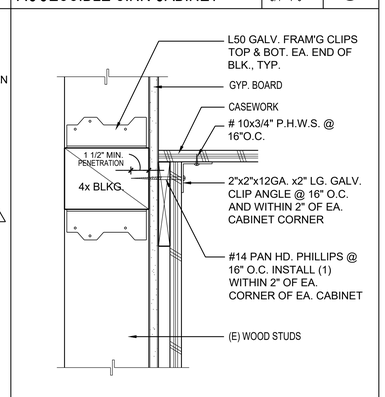

CABINET ANCHORAGE — 3"=1'-0" — 6

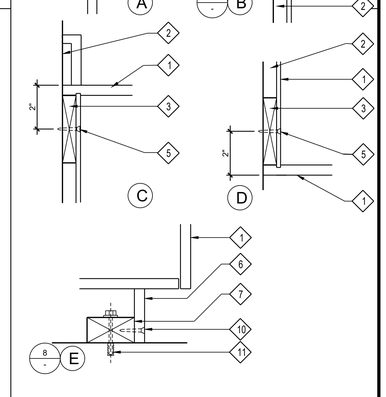

CASEWORK ANCHORAGE DETAILS — NTS — 2

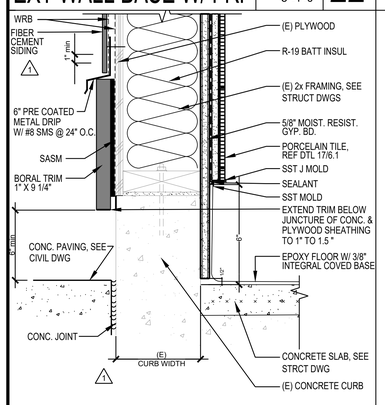

EXT WALL BASE W/ PORCELAIN TILE — 3"-1'-0" — 23

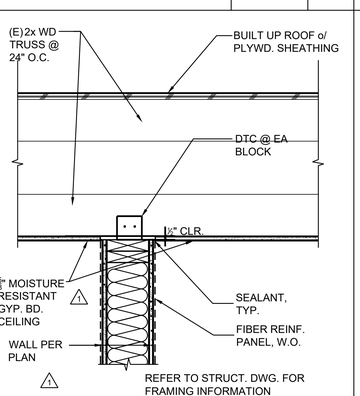

WALL PERPENDICULAR TO TRUSS — 1 1/2"=1'-0" — 19

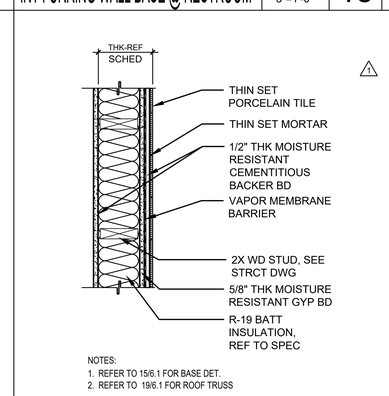

STUD SIZE	WALL THK	FIRE RATING (CBC/UL/GA LISTING) O HR	1 HR	2 HR	REMARKS
~~4~~	~~5 1/2~~	~~B4**~~	~~(CBC 15-1.3)~~		~~B4*A~~
6	7 1/4	B6**	(CBC 15-1.3)	—	B6*B
~~8~~	~~9 1/8~~	~~B8**~~	~~(CBC 15-1.3)~~	—	~~B8*B~~

PLAN INDICATION

NON RATED

REMARKS SCHEDULE
A. BATT SOUND INSUL
B. BATT SOUND INSUL

NOTES:
1. REF FIN SCHED FOR FIN
2. STUDS SPACED 16" OC

* OPTIONAL CHARACTER

FILE/CSI NUMBER: D09051-0022 REVISION DATE: 09/16/08 JOB NUMBER: 8816000

WALL TYPE B — 1"=1'-0" — 11

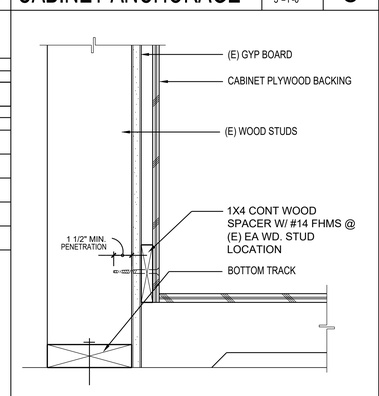

BASE ANCHOR — 3"=1'-0" — 7

1. CASEWORK (FRONT) (BACK) (TOP) (BOTTOM)
2. FACE OF WALL
3. 1 x 4 CONTINUOUS WOOD CLEAT
4. 1 x 2 CONTINUOUS WOOD CLEAT
5. ANCHORAGE - TYPE VARIES BASE UPON WALL CONSTRUCTION AS FOLLOWS: WOOD STUD FRAMING - #14 PHWS @ EA. 16"O.C. W/ 1-1/2" MIN. PEN. SEE DTL. 6 & 7. MINIMUM 4 PER WALL OR BASE CABINET, 2 TOP AND 2 BOTTOM, 6 PER TALL CABINET 2 TOP, 2 BOTTOM, AND 2 AT MIDDLE, INTO 3 x 4 WOOD BLOCKING ANCHORED TO WALL STUDS WITH 2"X2" X 12 GA X 2" TOP AND BOTTOM OF EACH BLOCK
6. 3/4" PARTICLE BOARD BASE
7. 2 x 4 P.T. PLATE
8. 3/4" PARTICLE BOARD FASCIA
9. 2 x 12 GUSSET @ 24"OC, 6" FROM EACH END W/ #10 x 2" LONG FHWS, SET 2x IN GLUE WHERE FASTENERS ARE PARALLEL TO 2x GRAIN, NO EXPOSED SCREW HEADS IN EXPOSED VERTICAL PORTIONS OF FASCIA
10. #10 x 3" FLAT HEAD WOOD SCREWS @ 24" OC
11. 3/8"DIA. RAMset WEDGE ANCHORS 3" MIN. EMBED @24" OC. TO CONC. SLAB MIN. 2 PER CABINET

CASEWORK ANCHORAGE NOTES — NTS — 2

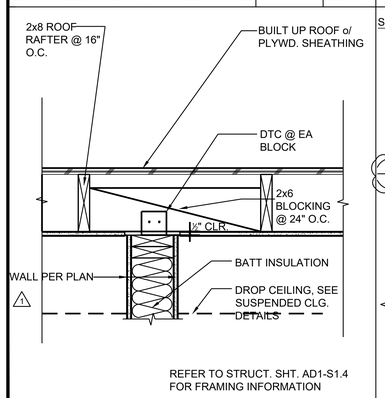

WALL PARALLEL TO WD ROOF JOIST — 1 1/2"=1'-0" — 24

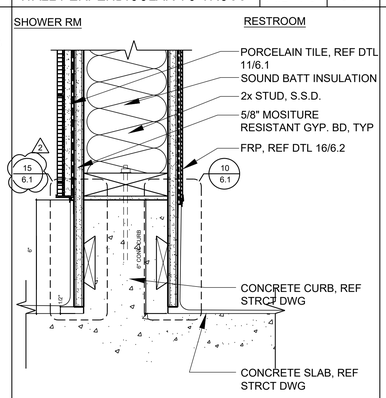

INT WALL BASE BTWN RESTRM/SHOWER — 3"=1'-0" — 20

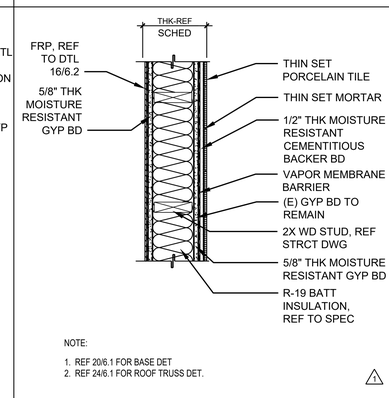

STUD SIZE	WALL THK	FIRE RATING (CBC/UL/GA LISTING) O HR	1 HR	2 HR	REMARKS
~~4~~	~~4 1/2~~	~~C4**~~	~~(UL U329)~~	—	~~C4*A~~
6	7 1/4	C6**	(UL U329)	—	C6*B
~~8~~	~~9 1/4~~	~~C8**~~	~~(UL U329)~~	—	~~C8*B~~

PLAN INDICATION

NON RATED

REMARKS SCHEDULE
A. BATT SOUND INSUL
B. BATT SOUND INSUL

NOTES:
1. STUDS SPACED 16" OC
2. ALL WALLS FULL HGT

* OPTIONAL CHARACTER

FILE/CSI NUMBER: D09051-0023 REVISION DATE: 11/12/02 JOB NUMBER: 8816000

WALL TYPE C — 1"=1'-0" — 12

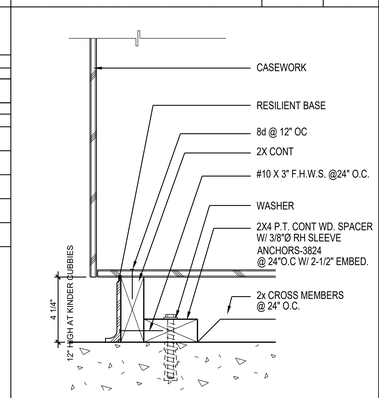

BASE ANCHOR @ FRONT — 3"=1'-0" — 8

1. ALL CASEWORK SHOWN ON SCHEDULE NOT NECESSARILY USED. ONLY THOSE CASEWORK ITEMS CALLED OUT ON INTERIOR ELEVATIONS AND/OR FLOOR PLANS SHALL BE USED.
2. CASEWORK NUMBERS SHOWN ON SCHEDULE ARE THOSE OF THE WOODWORK INSTITUTE (WI) DESIGN NUMBERING SYSTEM.
3. ALL CABINET DIMENSIONS INDICATED IN SCHEDULE ARE NOMINAL OUTSIDE DIMENSIONS.
4. ALL DIMENSIONS NOTED ON SCHEDULE ARE IN INCHES.
5. FILLER STRIPS ARE REQUIRED AT ENDS OF CABINETS WHERE CABINETS ARE ADJACENT TO WALLS.
6. ALL FILLER STRIPS AT ALL TALL AND WALL CABINETS TO HAVE TOP AND BOTTOM RETURNS.
7. HEIGHT DIMENSIONS OF BASE CABINETS INCLUDE FINISHED TOP THICKNESS OF 1 1/2" & SUBBASE HEIGHT OF 4" UNLESS OTHERWISE NOTED.
8. HEIGHT DIMESIONS OF APRONS INCLUDE FINISHED TOP THICKNESS OF 1 1/2" UNLESS OTHERWISE NOTED.
9. HEIGHT DIMENSIONS OF TOPS WITH APRONS FROM FINISHED FLOOR LINE SHALL MATCH HEIGHT OF ADJACENT BASE CABINETS UNLESS OTHERWISE NOTED.
10. ALL PLAN DIMENSIONS OF CASEWORK ARE CABINET DIMENSIONS ONLY & DO NOT INCLUDE TOPS.
11. PROVIDE FINISHED END PANELS FOR SUPPORT OF COUNTERTOPS AT UNDERCOUNTER EQUIPMENT OR KNEE SPACES WHERE THERE IS NO ADJACENT WALL OR CABINET THAT CAN BE USED FOR SUPPORT.
12. FINISH ALL EXPOSED PORTIONS OF CASEWORK AND COUNTERTOPS.
13. ALL UNITS INCLUDING OPEN UNITS SHALL HAVE CASEWORK MANUFACTURER'S STANDARD CABINET LINER UNLESS OTHERWISE NOTED.
14. ALL TOE SPACES SHALL BE 4" IN HEIGHT AND 3" IN DEPTH AND SHALL RETURN TO WALL WHERE ENDS OF CABINETS ARE EXPOSED.
15. ALL SHELVING SHALL BE ADJUSTABLE UNLESS OTHERWISE NOTED.
16. PROVIDE DUST CLOSURE PANELS TO CEILING OR DROPPED SOFFIT AS INDICATED ON ELEVATIONS OR PLAN.
17. ALL COUNTERTOPS SHALL BE OF DEPTHS AS SHOWN IN SCHEDULE AND SHALL BE OF MAXIMUM PRACTICAL LENGTHS REQUIRED TO CONFORM TO OVERALL BASE CABINET DIMENSIONS.
18. PROVIDE BACKSPLASH RETURN AT ENDS OF COUNTERTOPS WHERE ADJACENT TO WALL OR OTHER FULL HEIGHT CASEWORK.
19. ALL SINKS, SINK TRIM & ELECTRICAL ITEMS SHALL BE FURNISHED BY OTHER THAN THE CASEWORK MANUFACTURER UNLESS OTHERWISE NOTED.
20. ALL COUNTERTOPS SHALL BE PLASTIC LAMINATE UNLESS OTHERWISE NOTED.

GEN NOTES FOR CASEWORK — NTS

PBK
BERKELEY
2600 TENTH STREET, SUITE 700
BERKELEY, CA 94710-2597
510-450-1999 P

HONEYBEE POOL RENOVATION

CITY OF ROHNERT PARK
1170 GOLF COURSE DRIVE
ROHNERT PARK, CA 94928

LICENSED ARCHITECT
LOREN GACHEN
C-37926
12/3/21
STATE OF CALIFORNIA

CONSULTANT

VANESSA GARRETT P.E. CE84141 — DATE
CITY ENGINEER

REVISION SCHEDULE

NO	DATE	BY	DESCRIPTION
1	11/03/2022		AGENCY PLAN REVIEW
2	12/02/2022		AGENCY PLAN REVIEW

DRAWN: RSR — CHECKED: OAE
DATE: 02/25/2022 — SCALE: AS NOTED
PROJECT NUMBER: 2010200

CASEWORK & MISCELLANEOUS DETAILS

DRAWING NUMBER: 6.1

AGENCY BACKCHECK

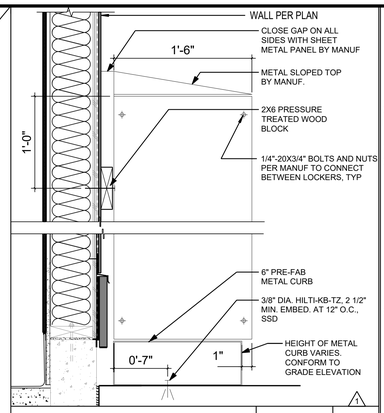

LOCKER ON METAL BASE | 1 1/2" = 1'-0" | 5

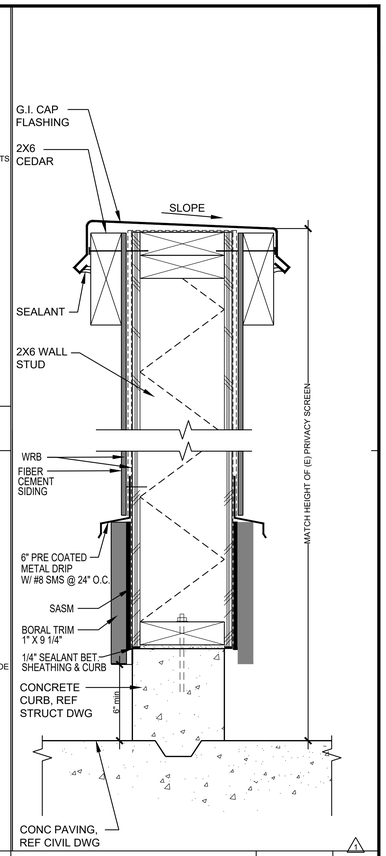

PRIVACY SCREEN | 3" = 1'-0" | 2

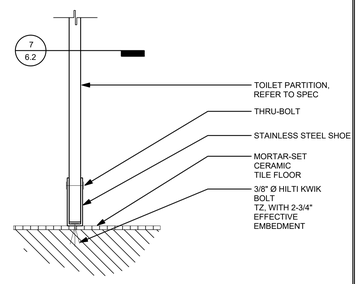

TYP RESTROOM PARTITION FLR ANCHOR | 3" = 1'-0" | 6

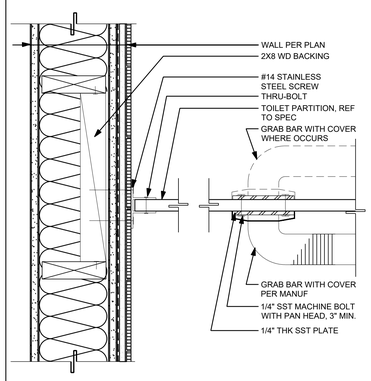

RESTROOM PARTITION WALL ANCHOR | 3" = 1'-0" | 7

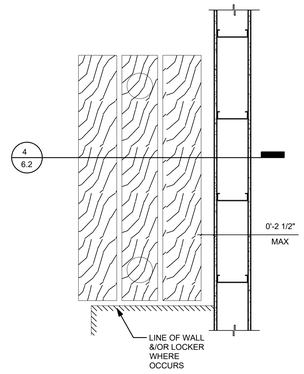

ACC WOOD BENCH - PLAN | 1" = 1'-0" | 3

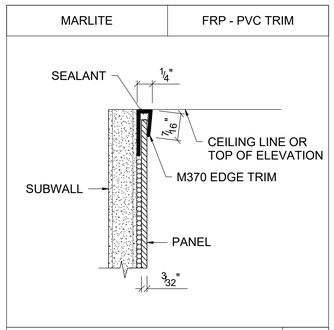

TOP EDGE - M370 | 1

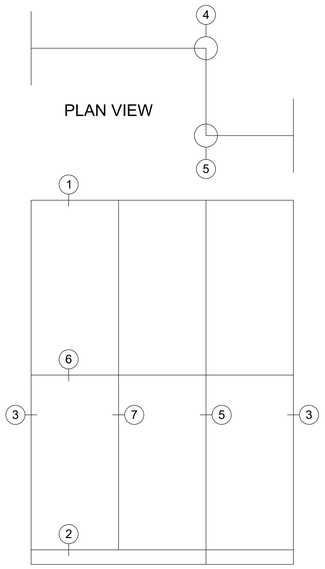

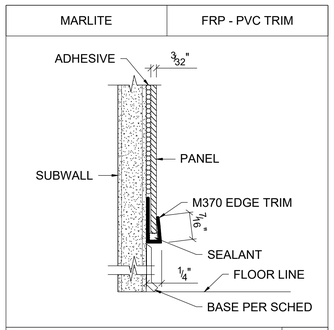

BOTTOM EDGE - M370 | 2

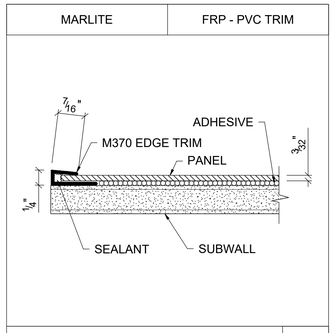

VERTICAL EDGE - M370 | 3

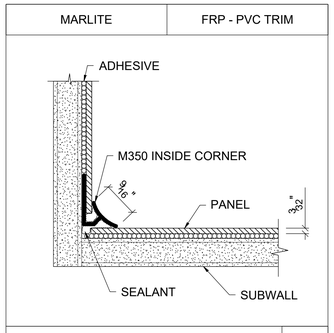

INSIDE CORNER - M350 | 4

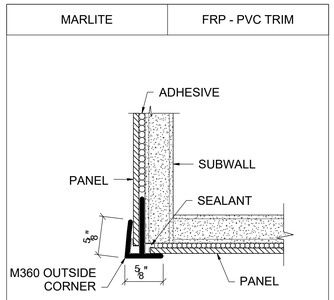

OUTSIDE CORNER - M360 | 5

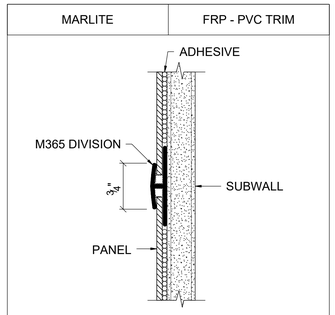

HORIZONTAL JOINT DETAIL - M365 | 6

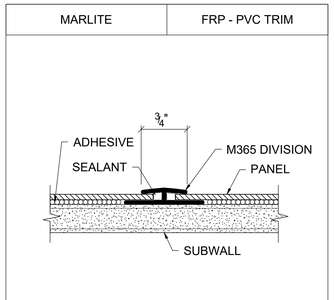

VERTICAL JOINT DETAIL - M365 | 7

FIBER REINFORCED PLASTIC (FRP) | 1' = 1'-0" | 16

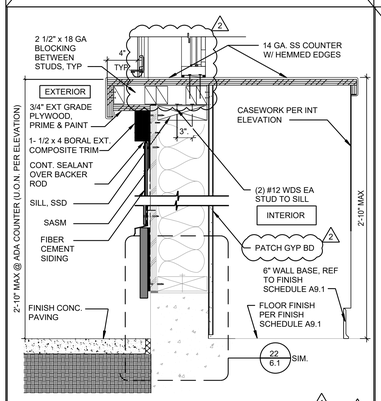

COUNTER @ CONSESSION ROLL UP DR | 1 1/2"=1'-0" | 12

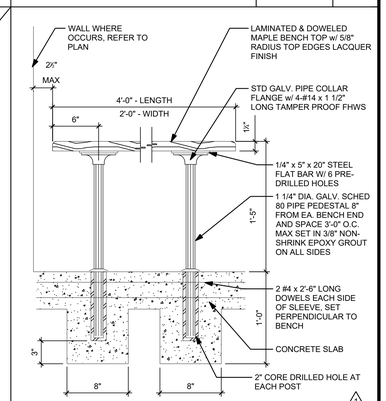

ACC WOOD BENCH | 1 1/2" = 1'-0" | 4

PBK
BERKELEY
2600 TENTH STREET, SUITE 700
BERKELEY, CA 94710-2597
510-450-1999 P

HONEYBEE POOL RENOVATION

CITY OF ROHNERT PARK
1170 GOLF COURSE DRIVE
ROHNERT PARK, CA 94928

LICENSED ARCHITECT
LOREN GACHEN
C-37926
12/31/23
STATE OF CALIFORNIA

CONSULTANT

VANESSA GARRETT P.E. CE84141
CITY ENGINEER
DATE

REVISION SCHEDULE

NO	DATE	BY	DESCRIPTION
1	11/03/2022		AGENCY PLAN REVIEW
2	12/02/2022		AGENCY PLAN REVIEW

DRAWN: RSR	CHECKED: OAE
DATE: 02/25/2022	SCALE: AS NOTED

PROJECT NUMBER: 2010200

CASEWORK & MISCELLANEOUS DETAILS

DRAWING NUMBER: 6.2

AGENCY BACKCHECK

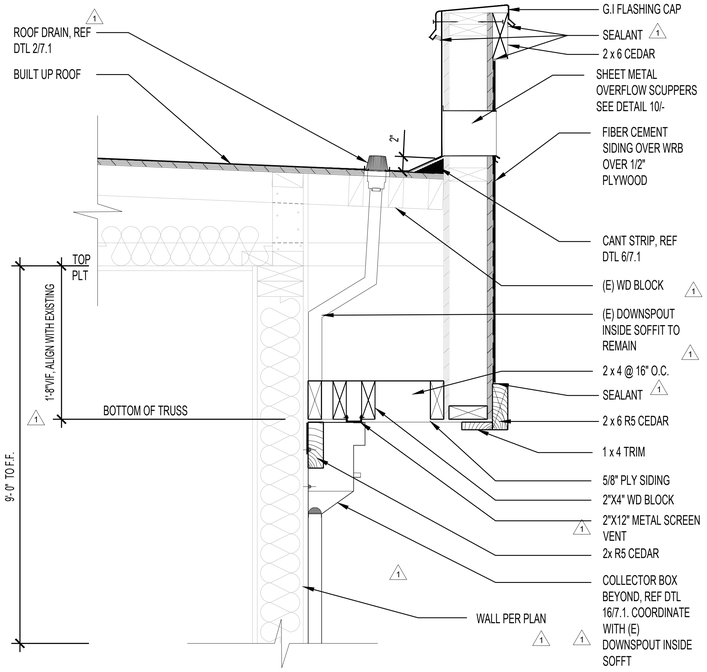

TYPICAL ROOF TRUSS AT FASCIA | 1-1/2" = 1'-0" | 18

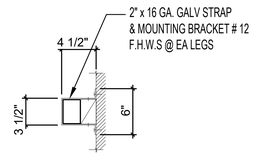

DOWNSPOUTS BRACKET | 1 1/2" = 1'-0" | 13

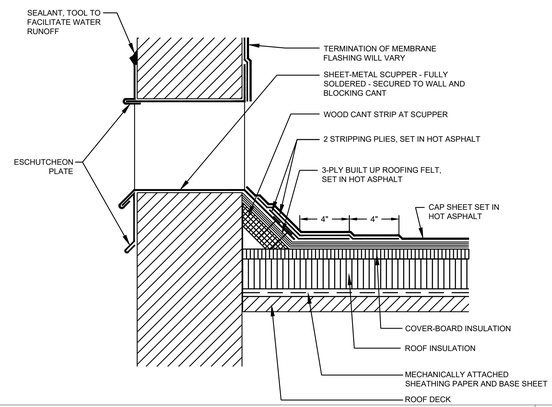

SHEET METAL OVERFLOW SCUPPER | 1" = 1'-0" | 10

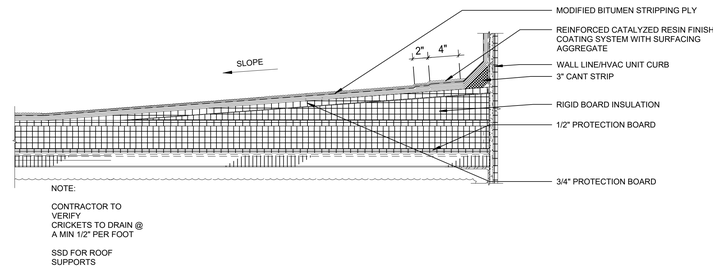

CRICKET DETAIL | 1 1/2" = 1'-0" | 1

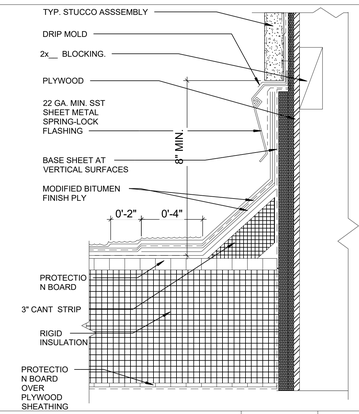

TYP CANT STRIP | 3" = 1'-0" | 6

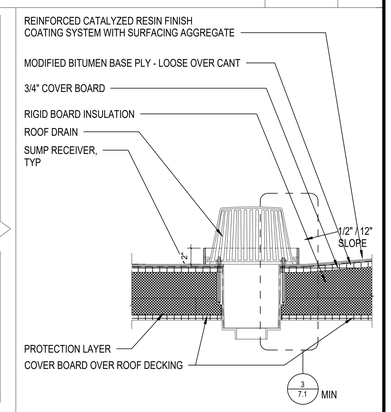

ROOF DRAIN | 1" = 1'-0" | 2

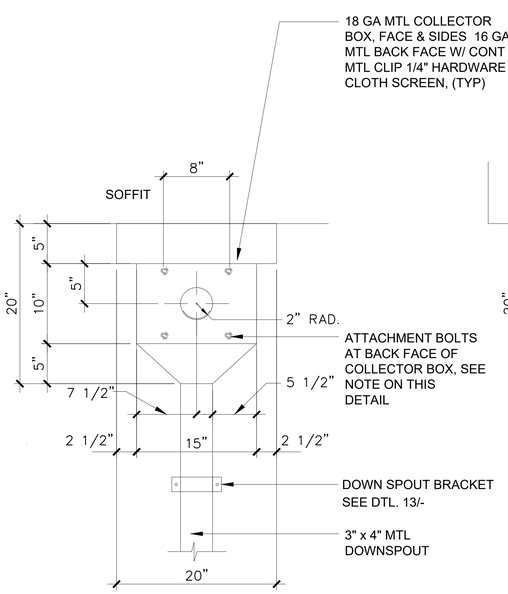

NOTE: COLLECTOR BOX ATTACHMENT AT CMU SURFACE: (4) - 3/8" AB W/ 4" MINIMUM EMBED 1/8" THK NEOPRENE WASHER AT EA BOLT

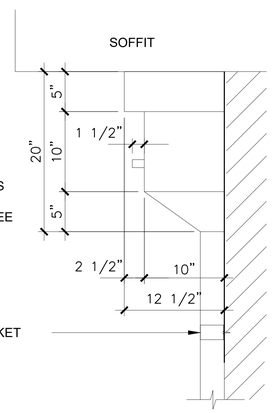

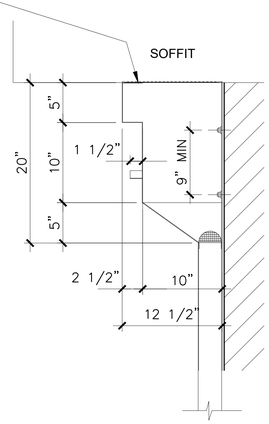

COLLECTOR BOX DETAIL | NTS | 16

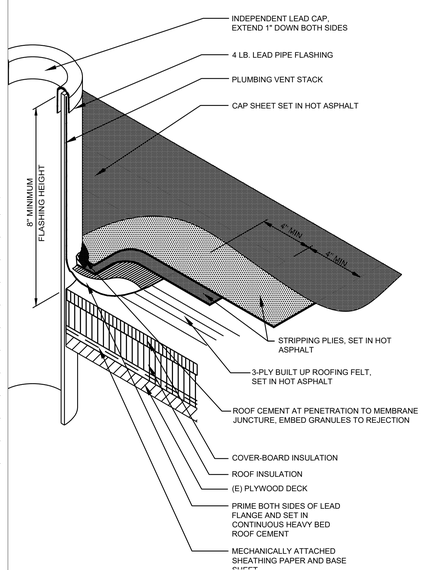

VENT PIPE PENETRATION | NTS | 12

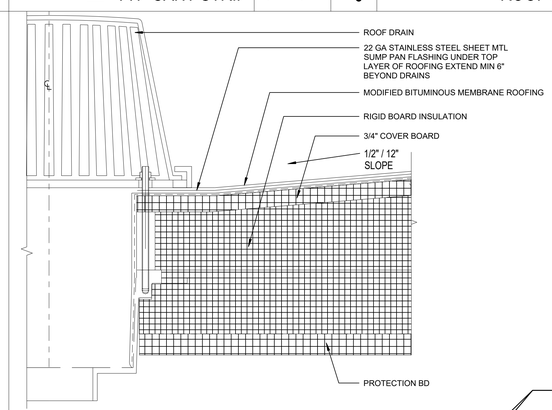

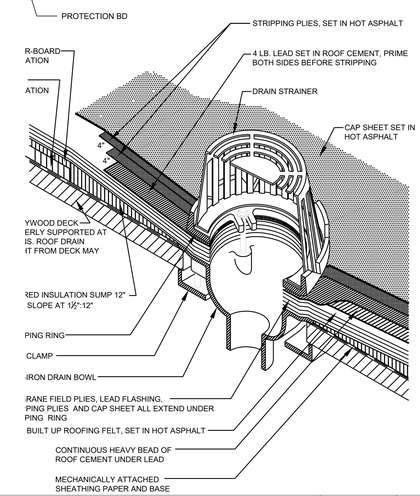

ENLARGED ROOF DRAIN & ISOMETRIC VIEW | 3" = 1'-0" | 4

PBK
BERKELEY
2600 TENTH STREET, SUITE 700
BERKELEY, CA 94710-2597
510-450-1999 P

HONEYBEE POOL RENOVATION

CITY OF ROHNERT PARK
1170 GOLF COURSE DRIVE
ROHNERT PARK, CA 94928

LICENSED ARCHITECT
LOREN GACHEN
C-37926
Date 10/3/21
STATE OF CALIFORNIA

CONSULTANT

VANESSA GARRETT P.E. CE84141
CITY ENGINEER
DATE

REVISION SCHEDULE

NO	DATE	BY	DESCRIPTION
1	11/03/2022		AGENCY PLAN REVIEW
2	12/02/2022		AGENCY PLAN REVIEW

DRAWN: VP | CHECKED: OE
DATE: 02/25/2022 | SCALE: NONE
PROJECT NUMBER: 2010200

THERMAL AND MOISTURE PROTECTION

DRAWING NUMBER: 7.1

AGENCY BACKCHECK

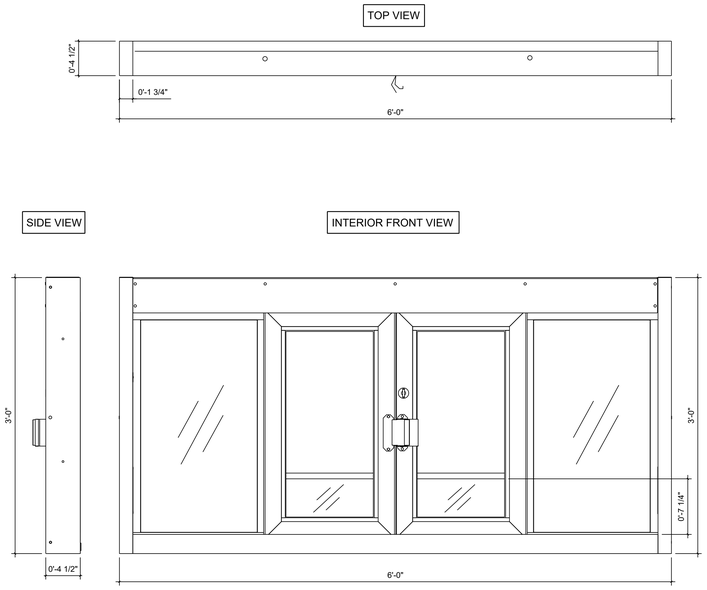

SERVICE WINDOW @ CONCESSION | 1 1/2"=1'-0" | 19

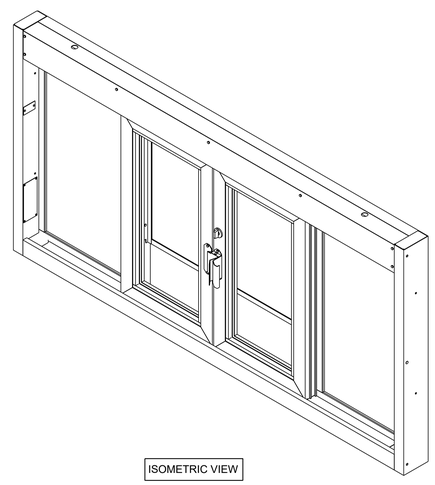

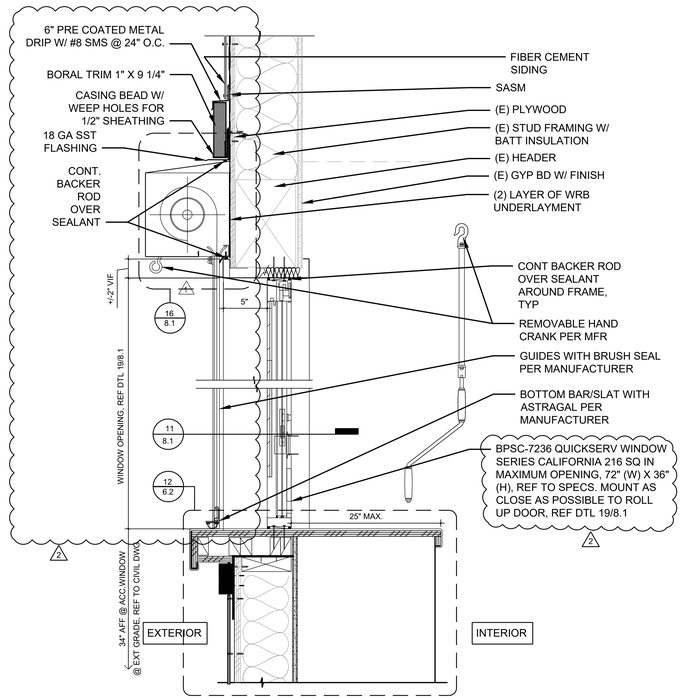

COUNTER SERVICE DOOR @ CONCESSION | 1 1/2"=1'-0" | 10

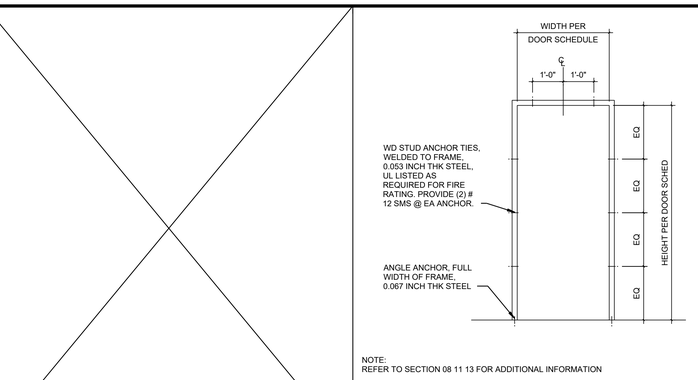

TYP DOOR ANCHORAGE | 1/2" = 1'-0" | 1

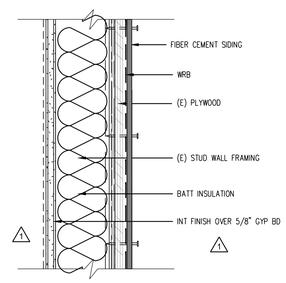

TYP. WALL HORIZ. LAP (SIDING) | 3"=1'-0" | 6

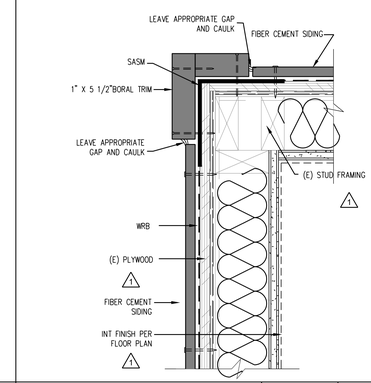

TYP. OUTSIDE CORNER AT SIDING (HORIZ.) | 3"=1'-0" | 2

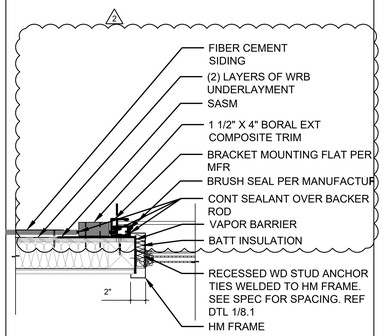

COUNTER SERVICE DOOR - JAMB | 1 1/2" = 1'-0" | 11

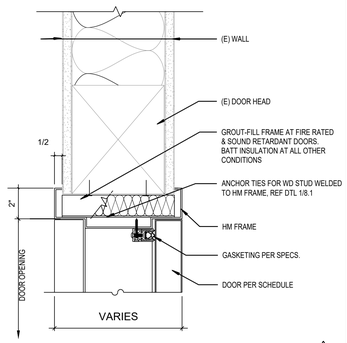

TYP INT DOOR HEAD (JAMB SIM) | 3" = 1'-0" | 7

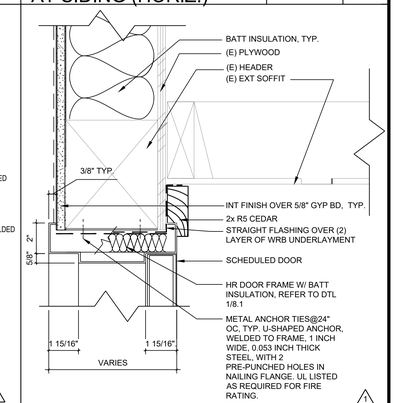

TYP EXT DOOR HEAD (JAMB SIM) | 3" = 1'-0" | 3

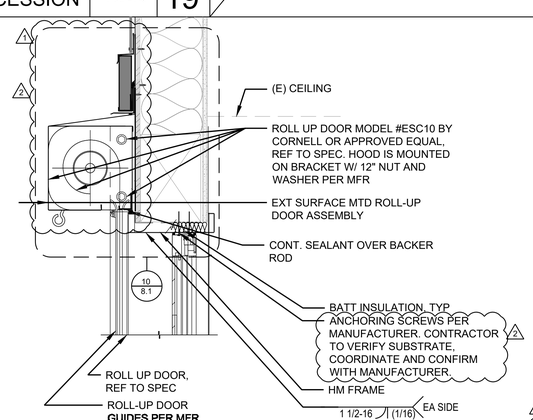

EXTERIOR ROLL UP DOOR HEAD | 1 1/2"=1'-0" | 16

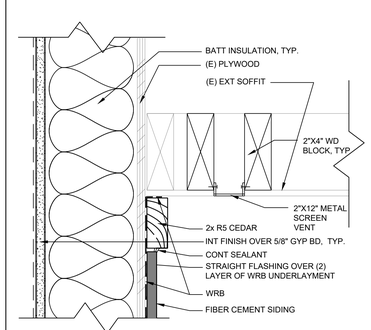

TYP SIDING TOP INSIDE CORNER | 3" = 1'-0" | 12

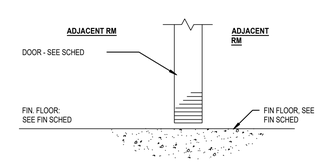

SEALED CONC THRESHOLD - INT | 3" = 1'-0" | 8

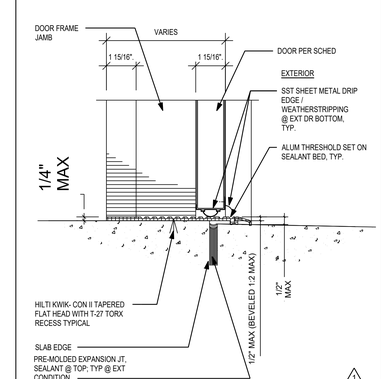

TYP DOOR THRESHOLD - EXTERIOR | 3" = 1'-0" | 4

PBK
BERKELEY
2600 TENTH STREET, SUITE 700
BERKELEY, CA 94710-2597
510-450-1999 P

HONEYBEE POOL RENOVATION

CITY OF ROHNERT PARK
1170 GOLF COURSE DRIVE
ROHNERT PARK, CA 94928

LICENSED ARCHITECT
LOREN GACHEN
C-37926
10/31/23
STATE OF CALIFORNIA

CONSULTANT

VANESSA GARRETT P.E. CE84141
CITY ENGINEER
DATE

REVISION SCHEDULE

NO	DATE	BY	DESCRIPTION
1	11/03/2022		AGENCY PLAN REVIEW
2	12/02/2022		AGENCY PLAN REVIEW

DRAWN: RSR | CHECKED: OAE
DATE: 02/25/2022 | SCALE: AS NOTED
PROJECT NUMBER: 2010200

WINDOW / DOOR DETAILS 1

DRAWING NUMBER: 8.1

AGENCY BACKCHECK

NOT USED

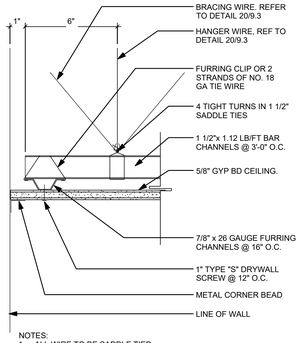

NOTES:
1. ALL WIRE TO BE SADDLE TIED.
2. FOR HANGER WIRE ATTACHEMENT & BRACING TO STRUCT, REF 20/-
3. SUSPENDED GYPSUM BOARD SHALL COMPLY THE DETAIL OF CONSTRUCTION PER DSA IR 25-2, SEE DETAIL 14/- SUSPENSION AND BRACING.

SUSPENDED GYP. BD. CEILING | 3" = 1'-0" | 17

NOT USED

NOT USED

NOT USED

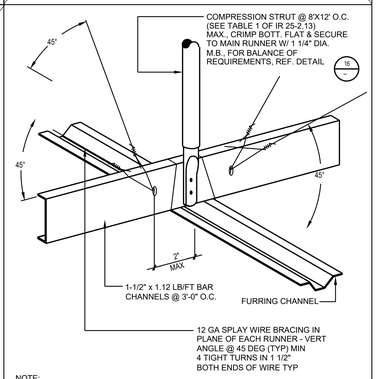

NOTE:
PROVIDE COMPRESSION STRUTS @ ALL T-BAR CEILINGS

SPLAY SUSPENSION AND BRACING | 3" = 1'-0" | 14

NOT USED

NOT USED

NOT USED

NOT USED

NOT USED

NOT USED

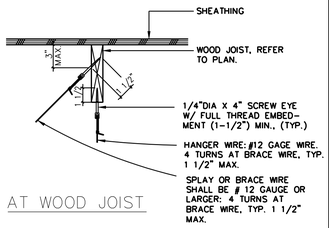

HANGER WIRE CONNECTION | 1 1/2" = 1'-0" | 20

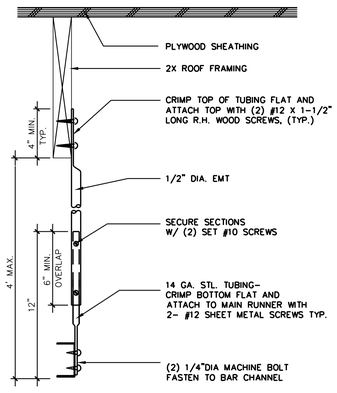

COMPRESSION STRUT | 3" = 1'-0" | 16

NOT USED

PBK
BERKELEY
2600 TENTH STREET, SUITE 700
BERKELEY, CA 94710-2597
510-450-1999 P

HONEYBEE POOL RENOVATION

CITY OF ROHNERT PARK
1170 GOLF COURSE DRIVE
ROHNERT PARK, CA 94928

LICENSED ARCHITECT
LOREN GACHEN
C-37926
12/31/23
STATE OF CALIFORNIA

CONSULTANT

VANESSA GARRETT P.E. CE84141 — DATE
CITY ENGINEER

REVISION SCHEDULE

NO	DATE	BY	DESCRIPTION
1	11/03/2022		AGENCY PLAN REVIEW
2	12/02/2022		AGENCY PLAN REVIEW

DRAWN:	CHECKED:
DATE: 02/25/2022	SCALE: AS NOTED
PROJECT NUMBER: 2010200	

SUSPENDED CEILING DETAILS

DRAWING NUMBER: 1 9.3

AGENCY BACKCHECK

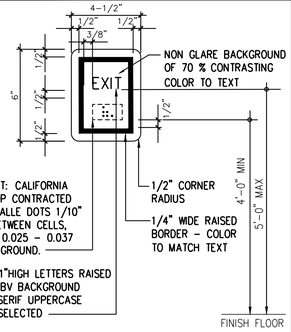

BRAILLE FONT: CALIFORNIA ROUNDED TOP CONTRACTED GRADE 2 BRAILLE DOTS 1/10" O.C. 0.30 BETWEEN CELLS, RAISED MIN. 0.025 – 0.037 ABOVE BACKGROUND.

TEXT: EXIT, 1"HIGH LETTERS RAISED MIN 1/32" ABV BACKGROUND
FONT: SAN SERIF UPPERCASE
COLOR: AS SELECTED

NOTE: PROVIDE MECHANICAL MOUNTING W/ VANDAL RESISTANT FASTENERS. PROVIDE ADHESIVE MOUNTING SYSTEM WHEN ATTACHED TO GLAZING. REFER TO SIGNAGE SCHED FOR LOCATIONS.

FILE/CSI NUMBER: DI0000-21101 REVISION DATE: 07/30/12 JOB NUMBER: XXXXX

TACTILE EXIT SIGN — 3"=1'-0" — 21

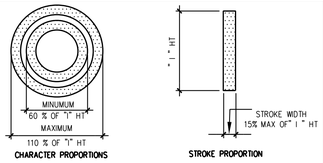

WIDTH TO HEIGHT PROPORTION TEMPLATE

BRAILLE AND TEXT TEMPLATE PER (CBC) CALIFORNIA BUILDING CODE AND (CCR) CALIFORNIA CODE OF REGULATIONS, TITLE 24, PART 2, SECTION 11B-703

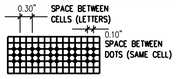

CALIFORNIA CONTRACTED GRADE 2 BRAILLE SHALL BE USED WHERE EVER BRAILLE IS REQUIRED. INDIVIDUAL BRAILLE DOTS SHALL EACH BE DISTINCT AND SEPARATE. EACH DOT SHALL BE ROUNDED OR DOMED IN LIEU OF SQUARE SIDED AND FLAT TOPPED

PROPORTIONS: CHARACTERS SHALL HAVE A FONT WHERE THE WIDTH OF THE UPPER CASE "O" AND THE THICKNESS OF THE UPPERCASE "I" ARE AS INDICATED ABOVE AND ARE PER CBC SECTION 11B-703.5.4.
TACTILE FONT: SHALL ALL BE UPPER CASE AND SHALL BE RAISED A MINIMUM OF 1/32".
COPY HT: SHALL BE 1" IN HEIGHT.
CHARACTER SPACING: MINIMUM OF 1/8"AND MAXIMUM OF 4 TIMES CHARACTER STROKE WIDTH. MEASURED BETWEEN CLOSETS POINTS OF ADJACENT LETTERS.
LINE SPACING: MINIMUM OF 135% AND MAXIMUM OF 170% OF THE UPPERCASE " I " HEIGHT MEASURED BASELINE TO BASELINE OF CHARACTERS..

FILE/CSI NUMBER: DI0000-17101 REVISION DATE: 05/01/15 JOB NUMBER: XXXXX

SIGNAGE TEMPLATES — FULL — 17

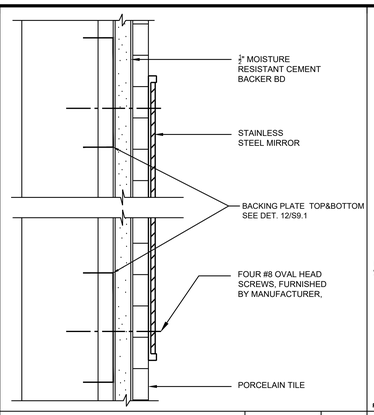

MIRROR — NTS — 13

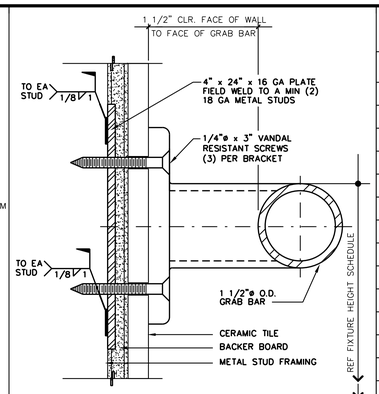

FILE/CSI NUMBER: DI0000-05102 REVISION DATE: 03/03/14 JOB NUMBER: XXXXX

GRAB BAR @ MET STUD — FULL SIZE — 9

SIGNAGE SCHEDULE

KEY NOTE	ITEM DESCRIPTION	DETAIL	LOCATION	REMARKS
1	MEN RESTROOM WALL SIGN	11/10.1	ALL SINGLE USE RESTROOM DOORS	1
2	MEN RESTROOM DOOR SYMBOL	8/10.1	ALL SINGLE USE RESTROOMS	1,2
3	ACCESSIBLE ENTRY SIGN	14/10.1	ALL MAIN EXTERIOR BUILDING ENTRIES	1
4	TACTILE EXIT SIGN (EXTERIOR EXIT)	21/10.1	EXTERIOR EXIT DOORS	1,2,3
5	TACTILE EXIT SIGN (CORRIDOR OR HALLWAY)	23/10.1	CORRIDOR AND HALLWAY EXIT DOORS	1,2,3
6	ROOM CONTROL SIGNAGE	10/10.1	ALL INTERIOR & EXTERIOR ROOMS	1,2
7	NO SMOKING SIGN	18/10.1	ALL MAIN EXTERIOR BUILDING ENTRIES	-
8	DIRECTIONAL ACCESS SIGN	15/10.1	REFER TO SITE PLAN FOR LOCATIONS	-
9	ASSISTIVE LISTENING SYSTEM	3/10.1	CONFERENCE ROOM	
10	WOMEN RESTROOM WALL SIGN	19/10.1	ALL SINGLE USE RESTROOMS	1,2
11	WOMEN RESTROOM DOOR SYMBOL	4/10.1	ALL SINGLE USE RESTROOMS	1,2
12	WALL MTD RESTROOM SIGN	1210.1	ALL SINGLE USE RESTROOMS	1,2

REMARKS

1. REF DET 16/- FOR MOUNTING
2. REF DET 17/- FOR BRAILLE TEMPLATE
3. REF FLOOR PLAN FOR DOOR LOCATIONS.

"CODE-GOVERNEDT SIGNS TO BE FIELD. INSPECTED PER CBC 11B-703.1.1.2"

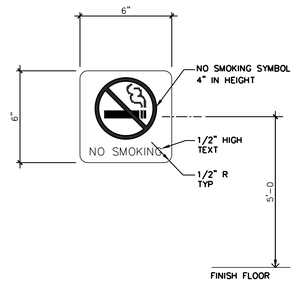

NOTE:
PROVIDE MECHANICAL MOUNTING W/ VANDAL RESISTANT FASTENERS. PROVIDE ADHESIVE MOUNTING SYSTEM WHEN ATTACHED TO GLAZING.
REFER TO SIGNAGE SCHEDULE FOR LOCATIONS

FILE/CSI NUMBER: DI0000-18101 REVISION DATE: 06/10/04 JOB NUMBER: XXXXX

NO SMOKING SYMBOL — 3"=1'-0" — 18

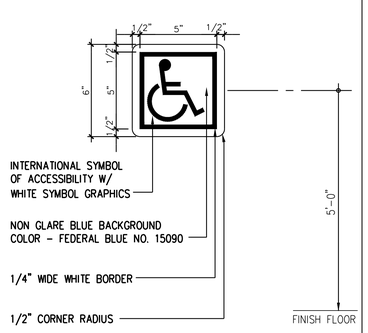

NOTE: PROVIDE MECHANICAL MOUNTING W/ VANDAL RESISTANT FASTENERS. PROVIDE ADHESIVE MOUNTING SYSTEM WHEN ATTACHED TO GLAZING. REFER TO SIGNAGE SCHED FOR LOCATIONS

FILE/CSI NUMBER: DI0000-20101 REVISION DATE: 06/16/04 JOB NUMBER: XXXXX

ACCESSIBLE ENTRY SIGN — 3"=1'-0" — 14

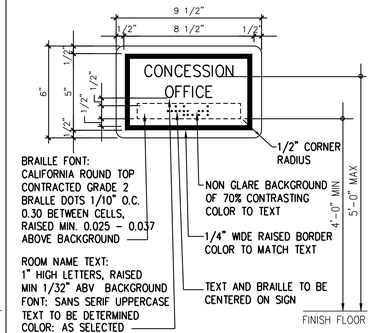

NOTE: PROVIDE MECHANICAL MOUNTING W/ VANDAL RESISTANT FASTENERS. PROVIDE ADHESIVE MOUNTING SYSTEM WHEN ATTACHED TO GLAZING. REFER TO SIGNAGE SCHED FOR LOCATIONS

FILE/CSI NUMBER: DI0000-10101 REVISION DATE: 10/01/14 JOB NUMBER: XXXXX

ROOM CONTROL SIGNAGE — 3"=1'-0" — 10

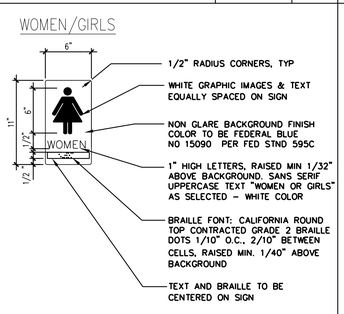

NOTE:
ATTACH SIGNS USING FLATHEAD VANDAL RESISTANT COUNTERSUNK SCREWS AND ADHESIVE. SIGNS SHALL BE MTD 5'-0" MAX ABV FFL TO THE BOT OF THE LETTERS AND 4'-0" MIN ABV FFL TO THE BOT OF THE BRAILLE. MTD SIGN ON STRIKE SIDE OF DOOR . REFER TO SIGNAGE SCHED FOR LOCATIONS.

FILE/CSI NUMBER: DI0000-04101 REVISION DATE: 10/01/14 JOB NUMBER: XXXXX

WALL MTD RESTRM SIGN — 1 1/2"=1'-0" — 19

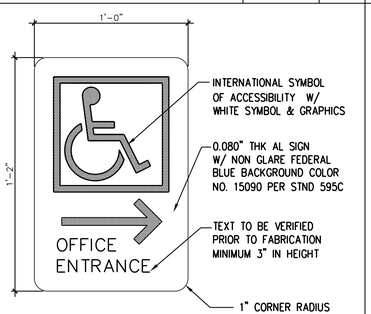

NOTE:
REF DET 13/10.2 FOR POLE MTD SIGN, DET 17/10.2 FOR WALL MTD SIGN. REFER TO SIGNAGE SCHEDULE & SITE PLAN FOR LOCATIONS.

FILE/CSI NUMBER: DI0000-10102 REVISION DATE: 06/10/11 JOB NUMBER: BB16000

DIRECTIONAL ACCESS SIGN — 1 1/2"=1'-0" — 15

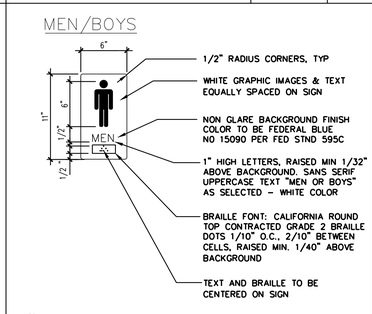

NOTE:
ATTACH SIGNS USING FLATHEAD VANDAL RESISTANT COUNTERSUNK SCREWS AND ADHESIVE. SIGNS SHALL BE MTD 5'-0" MAX ABV FFL TO THE BOT OF THE LETTERS AND 4'-0" MIN ABV FFL TO THE BOT OF THE BRAILLE. MTD SIGN ON STRIKE SIDE OF DOOR . REFER TO SIGNAGE SCHED FOR LOCATIONS.

FILE/CSI NUMBER: DI0000-08101 REVISION DATE: 10/01/14 JOB NUMBER: XXXXX

WALL MTD RESTRM SIGN — 1 1/2"=1'-0" — 11

ASSISTIVE LISTENING SYSTEM SCHEDULE
(OFOI):

CONFERENCE ROOM (A120):

BASIC OF DESIGN: WILLIAMS SOUND PPA 457 PRO

(1) PPA T45 TRANSMITTER
(4) PPA R37 RECIEVERS
(4) NKL 001 NECKLOOPS
(4) EAR 013 SINGLE MINI EARBUD
(1) ANT 025 WHIP ANTENNA
(1) TFO 048 POWER SUPPLY
(1) WLC 004 MAIN POWER CORD (U.S.)
(1) WCA 013 RCA AUDIO CABLE, 3 FT.
(4) BAT 001-2-AA ALKALINE BATTERIES
(1) ANT 005 COAXIAL ANTENNA
(1) RPK 005 RACK PANEL KIT

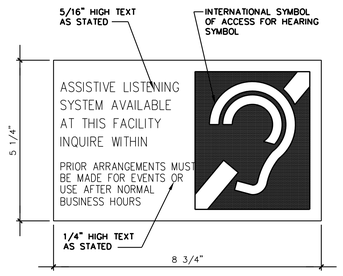

NOTE: PROVIDE MECHANICAL MOUNTING W/VANDAL RESISTANT COUNTERSUNK FASTENERS AND ADHESIVE REFER TO SIGNAGE SCHED FOR LOCATIONS.

FILE/CSI NUMBER: DI0000-13101 REVISION DATE: 03/13/01 JOB NUMBER: XXXXX

ASSISTIVE LISTENING DEVICE SIGN — HALF SIZE — 3

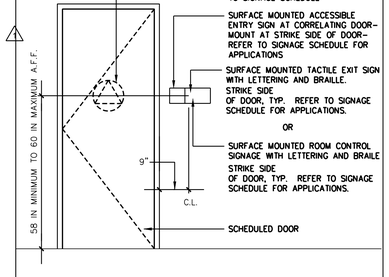

FILE/CSI NUMBER: DI0000-16101 REVISION DATE: 07/30/12 JOB NUMBER: XXXXX

SIGNAGE MOUNTING DETAIL — 1/2"=1'-0" — 16

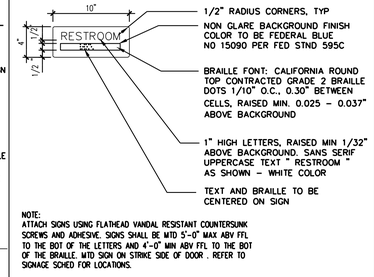

NOTE:
ATTACH SIGNS USING FLATHEAD VANDAL RESISTANT COUNTERSUNK SCREWS AND ADHESIVE. SIGNS SHALL BE MTD 5'-0" MAX ABV FFL TO THE BOT OF THE LETTERS AND 4'-0" MIN ABV FFL TO THE BOT OF THE BRAILLE. MTD SIGN ON STRIKE SIDE OF DOOR . REFER TO SIGNAGE SCHED FOR LOCATIONS.

FILE/CSI NUMBER: DI0000-12101 REVISION DATE: 03/14/17 JOB NUMBER: XXXXX

WALL MTD RESTRM SIGN — 1 1/2"=1'-0" — 12

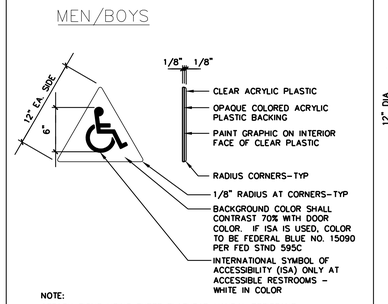

NOTE:
ATTACH SIGNS USING THREE FLATHEAD VANDAL RESISTANT COUNTERSUNK SCREWS AND ADHESIVE. SIGNS SHALL BE CENTERED ON THE DOOR AND MOUNTED 5'-0" ABOVE FIN FLOOR LINE TO CENTER OF SIGN. REFER TO SIGNAGE SCHED FOR LOCATIONS.

FILE/CSI NUMBER: DI0000-07101 REVISION DATE: 08/28/14 JOB NUMBER: XXXXX

RESTROOM SYMBOL — 1 1/2"=1'-0" — 8

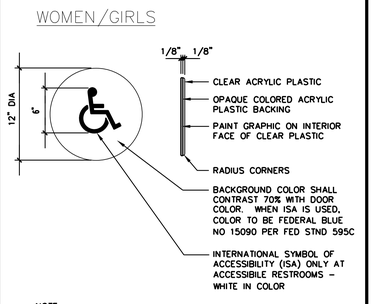

NOTE:
ATTACH SIGNS USING THREE FLATHEAD VANDAL RESISTANT COUNTERSUNK SCREWS AND ADHESIVE. SIGNS SHALL BE CENTERED ON THE DOOR AND MOUNTED 5'-0" ABOVE FIN FLOOR LINE TO CENTER OF SIGN. REFER TO SIGNAGE SCHED FOR LOCATIONS.

FILE/CSI NUMBER: DI0000-03101 REVISION DATE: 08/28/14 JOB NUMBER: XXXXX

RESTROOM SYMBOL — 1 1/2"=1'-0" — 4

PBK
BERKELEY
2600 TENTH STREET, SUITE 700
BERKELEY, CA 94710-2597
510-450-1999 P

HONEYBEE POOL RENOVATION

CITY OF ROHNERT PARK
1170 GOLF COURSE DRIVE
ROHNERT PARK, CA 94928

LICENSED ARCHITECT
LOREN GACHEN
C-37926
12/31/22
STATE OF CALIFORNIA

CONSULTANT

VANESSA GARRETT P.E. CE84141 — DATE
CITY ENGINEER

REVISION SCHEDULE

NO	DATE	BY	DESCRIPTION
1	11/03/2022		AGENCY PLAN REVIEW
2	12/02/2022		AGENCY PLAN REVIEW

DRAWN: WLC — CHECKED:
DATE: 02/25/2022 — SCALE: AS NOTED
PROJECT NUMBER: 2010200

SPECIALTY DETAILS AND SCHEDULES

DRAWING NUMBER: 10.1

AGENCY BACKCHECK

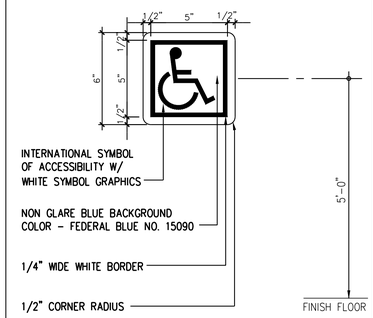

NOTE: PROVIDE MECHANICAL MOUNTING W/ VANDAL RESISTANT FASTENERS. PROVIDE ADHESIVE MOUNTING SYSTEM WHEN ATTACHED TO GLAZING. REFER TO SIGNAGE SCHED FOR LOCATIONS

FILE/CSI NUMBER: D10000-20101 REVISION DATE: 06/16/04 JOB NUMBER: XXXXX

ACCESSIBLE ENTRY SIGN | 3"=1'-0" | 17

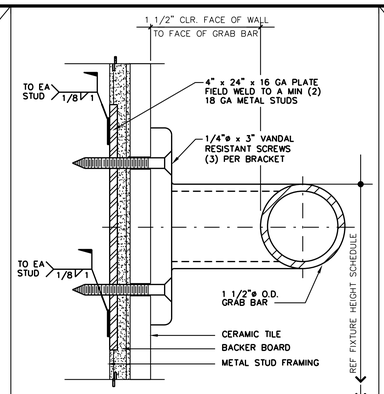

FILE/CSI NUMBER: D10000-05102 REVISION DATE: 03/03/14 JOB NUMBER: XXXXX

GRAB BAR @ MET STUD | FULL SIZE | 5

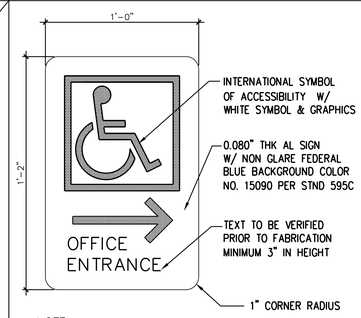

NOTE:
REF DET 13/10.2 FOR POLE MTD SIGN, DET 17/10.2 FOR WALL MTD SIGN. REFER TO SIGNAGE SCHEDULE & SITE PLAN FOR LOCATIONS.

FILE/CSI NUMBER: D10000-10102 REVISION DATE: 06/10/11 JOB NUMBER: 8816000

DIRECTIONAL ACCESS SIGN | 1 1/2"=1'-0" | 10

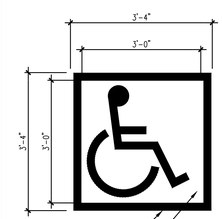

NOTES:
1) ALL STROKES TO BE 2" WIDE W/ WHITE PAINT
2) PROVIDE 2 (TWO) COATS OF PAINT
3) BACKGROUND COLOR TO BE FEDERAL BLUE NO. 15090 PER FEDERAL STANDARD NO. 595C.
4) LOCATE SYMBOL AT CENTER OF ACC PARKING STALL WHERE SHOWN ON SITE PLAN

FILE/CSI NUMBER: D10000-11102 REVISION DATE: 03/31/17 JOB NUMBER: 8816000

ACCESS SIGN | 3/4"=1'-0" | 11

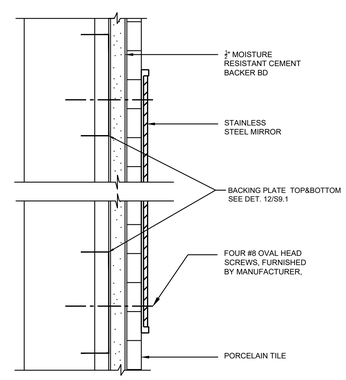

MIRROR | NTS | 7

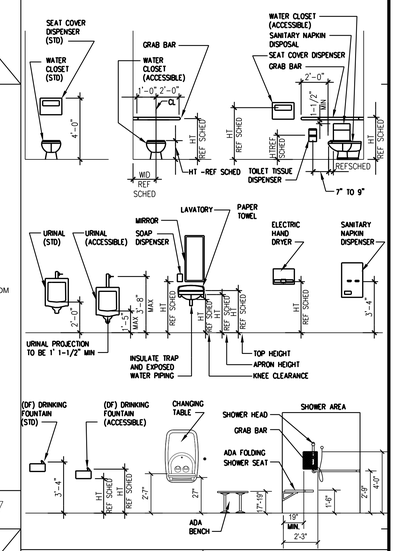

FIXTURE	SUGGESTED DIMENSION
	A
TOILET CENTER LINE FROM WALL	1'-5" TO 1'-6"
TOILET SEAT HEIGHT (TOP OF SEAT)	1'-5" TO 1'-7"
GRAB BAR HEIGHT (TOP OF BAR))	2'-9" TO 3'-0"
TOILET PAPER DISPENSER HT TO OUTLET	1'-7" MIN
NAPKIN DISPOSAL IN BACK OF TOILET	6"MAX
DISPENSER OR MIRROR HEIGHT	3'-4"MAX
LAVATORY/SINK TOP HEIGHT	2'-10"MAX
LAVATORY APRON CLEARANCE	2'-5"MIN
LAVATORY/SINK KNEE CLEARANCE	2'-3"MIN
D F BUBBLER HEIGHT	3'-0"MAX
D F BUBBLER FROM FRONT EDGE	5"MAX
D F CONTROL FROM FRONT EDGE	6" MAX
D F KNEE CLEARANCE	2'-3"MIN
RAMP/STAIR HANDRAIL HEIGHT	2'-10" TO 3'-2"

LEGEND
A = ADULT DIMENSIONS (AGE 12 AND OVER)

NOTES
1. ALL FIXTURES AND ACCESSORIES ARE ACCESSIBLE UNLESS OTHERWISE NOTED OR DIMENSIONED.
2. THERE SHALL BE NO SHARP OR ABRASIVE SURFACES UNDER LAVATORIES.
3. REFER TO ENLARGED TOILET PLAN DRAWINGS FOR TOILET ACCESSORY LOCATIONS.
4. ALL ACCESSORIES ARE TO BE ACCESSIBLE WITH A MAXIMUM REACH HEIGHT OF 3'-4" FROM FLOOR TO TOP OF FUNCTIONAL POINT UNLESS OTHERWISE NOTED OR DIMENSIONED. MIRROR HEIGHT IS TO BOTTOM OF REFLECTIVE SURFACE.

MOUNTING HT SCHED | NTS | 4

PBK
BERKELEY
2600 TENTH STREET, SUITE 700
BERKELEY, CA 94710-2597
510-450-1999 P

HONEYBEE POOL RENOVATION

CITY OF ROHNERT PARK
1170 GOLF COURSE DRIVE
ROHNERT PARK, CA 94928

LICENSED ARCHITECT
LOREN GACHEN
C-37926
Lic Exp 12/31/23
STATE OF CALIFORNIA

CONSULTANT

VANESSA GARRETT P.E. CE84141 DATE
CITY ENGINEER

REVISION SCHEDULE

NO	DATE	BY	DESCRIPTION
1	11/03/2022		AGENCY PLAN REVIEW
2	12/02/2022		AGENCY PLAN REVIEW

DRAWN: WLC CHECKED:
DATE: 02/25/2022 SCALE: AS NOTED
PROJECT NUMBER: 2010200

SPECIALTY DETAILS AND SCHEDULES

DRAWING NUMBER: 10.2

AGENCY BACKCHECK

IMPROVEMENT PLANS

FOR

HONEYBEE POOL RENOVATION

1170 GOLF COURSE DR.

ROHNERT PARK, CA 94928

GENERAL CIVIL NOTES

GENERAL:

1. ALL PERMITS WILL BE SECURED BY THE CONTRACTOR AND IT IS THE RESPONSIBILITY OF THE CONTRACTOR TO COMPLY WITH THE CONDITIONS AND REQUIREMENTS OF THE PERMITS.
2. THE CONTRACTOR SHALL TAKE EFFECTIVE ACTION TO PREVENT THE FORMATION OF AN AIRBORNE DUST NUISANCE AND SHALL BE RESPONSIBLE FOR DAMAGE RESULTING FROM THEIR FAILURE TO DO SO.
3. THE CONTRACTOR SHALL PROVIDE ALL LIGHTS, SIGNS, BARRICADES, FLAGMEN OR OTHER DEVICES NECESSARY TO PROVIDE FOR SAFETY.
4. THE CONTRACTOR SHALL POST EMERGENCY TELEPHONE NUMBERS FOR THE POLICE, FIRE AMBULANCE, AND THOSE AGENCIES RESPONSIBLE FOR MAINTENANCE OF UTILITIES IN THE VICINITY OF THE JOB SITE.
5. LENGTHS OF SANITARY SEWERS AND STORM DRAINS SPECIFIED ARE HORIZONTAL DISTANCES AS MEASURED FROM CENTERS OF STRUCTURES ROUNDED TO THE NEAREST FOOT.
6. EXISTING UNDERGROUND UTILITIES AND IMPROVEMENTS ARE SHOWN IN THEIR APPROXIMATE LOCATIONS BASED UPON RECORD INFORMATION AVAILABLE TO THE ENGINEER AT THE TIME OF PREPARATION OF THESE PLANS. LOCATIONS MAY NOT HAVE BEEN VERIFIED IN THE FIELD AND NO GUARANTEE IS MADE AS TO THE ACCURACY OR COMPLETENESS OF THE INFORMATION SHOWN. THE CONTRACTOR SHALL PERFORM AT THEIR EXPENSE A FIELD OBSERVATION LOCATING ALL EXISTING UTILITIES INCLUDING ELEVATIONS AND NOTIFY THE OWNER AND THE ENGINEER OF ANY CONFLICTS PRIOR TO CONSTRUCTION. IT SHALL BE THE RESPONSIBILITY OF THE CONTRACTOR TO DETERMINE THE EXISTING LOCATIONS OF UTILITIES SHOWN ON THESE PLANS. ANY ADDITIONAL COST INCURRED AS A RESULT OF THE CONTRACTOR'S FAILURE TO VERIFY LOCATIONS OF THE EXISTING UTILITIES PRIOR TO BEGINNING CONSTRUCTION SHALL BE BORNE BY THE CONTRACTOR.
7. CONTRACTOR TO VERIFY ALL EXISTING INVERT ELEVATIONS FOR STORM DRAIN AND SANITARY SEWER CONSTRUCTION PRIOR TO ANY WORK. ALL WORK FOR STORM DRAIN AND SANITARY SEWER INSTALLATION SHALL BEGIN AT THE DOWNSTREAM CONNECTION POINT. THIS WILL ALLOW FOR ANY NECESSARY ADJUSTMENTS TO BE MADE PRIOR TO THE INSTALLATION OF THE ENTIRE LINE. IF THE CONTRACTOR FAILS TO BEGIN AT THE DOWNSTREAM CONNECTION POINT AND WORKS UPSTREAM, HE SHALL PROCEED AT HIS OWN RISK AND BE RESPONSIBLE FOR ANY ADJUSTMENTS NECESSARY.
8. CONTRACTOR SHALL UNCOVER AND EXPOSE ALL EXISTING UTILITY AND SEWER LINES WHERE THEY ARE CROSSED ABOVE OR BELOW BY THE NEW FACILITY BEING CONSTRUCTED IN ORDER TO VERIFY THE GRADE AND TO ASSURE THAT THERE IS SUFFICIENT CLEARANCE. PIPES SHALL NOT BE STRUNG NOR TRENCHING COMMENCED UNTIL ALL CROSSINGS HAVE BEEN VERIFIED FOR CLEARANCE. IF THE CONTRACTOR FAILS TO FOLLOW THIS PROCEDURE HE WILL BE SOLELY RESPONSIBLE FOR ANY EXTRA WORK OR MATERIAL REQUIRED IF MODIFICATIONS TO THE DESIGN ARE NECESSARY.
9. ALL EXISTING UTILITIES AND IMPROVEMENTS THAT BECOME DAMAGED DURING CONSTRUCTION SHALL BE COMPLETELY RESTORED TO THE SATISFACTION OF THE OWNER AT THE CONTRACTOR'S SOLE EXPENSE.
10. CONTRACTOR TO TAKE NECESSARY PRECAUTIONARY MEASURES TO PREVENT SOIL EROSION AND SEDIMENTATION. EXISTING AND PROPOSED DRAINAGE STRUCTURES TO BE TEMPORARILY COVERED WITH FILTER FABRIC OR EQUAL UNTIL SURROUNDING PAVEMENT IS INSTALLED.
11. ANY RELOCATION OF UTILITIES SHALL BE COORDINATED WITH THE OWNER AND CONDUCTED IN ACCORDANCE WITH ANY AND ALL REQUIREMENTS OF THE OWNER, INCLUDING FEES, BONDS. PERMITS AND WORKING CONDITIONS, ETC. THE OWNER SHALL PAY THE FEES, BONDS, AND FILE THE APPROPRIATE PERMITS FOR ALL SUCH RELOCATION WORK. ALL ON- SITE UTILITY WORK IS THE RESPONSIBILITY OF THE CONTRACTOR (MATERIALS AND INSTALLATION).
12. IF ARCHAEOLOGICAL MATERIALS ARE UNCOVERED DURING GRADING. TRENCHING OR OTHER EXCAVATION, EARTHWORK WITHIN 100 FEET OF THESE MATERIALS SHALL BE STOPPED UNTIL A PROFESSIONAL ARCHAEOLOGIST WHO IS CERTIFIED BY THE SOCIETY OF CALIFORNIA ARCHAEOLOGY (SCA) AND/OR THE SOCIETY OF PROFESSIONAL ARCHAEOLOGY (SOPA) HAS HAD AN OPPORTUNITY TO EVALUATE THE SIGNIFICANCE OF THE FIND AND SUGGEST APPROPRIATE MITIGATION MEASURES, IF THEY ARE DEEMED NECESSARY.
13. THESE PLANS DO NOT SPECIFY NOR RECOMMEND THE USE OR INSTALLATION OF ANY MATERIAL OR EQUIPMENT WHICH IS MADE FROM, OR WHICH CONTAINS ASBESTOS FOR USE IN THE CONSTRUCTION OF THESE IMPROVEMENTS. ANY PARTY INSTALLING OR USING SUCH MATERIALS OR EQUIPMENT SHALL BE SOLELY RESPONSIBLE FOR ALL INJURIES. DAMAGES, OR LIABILITIES, OF ANY KIND, CAUSED BY THE USE OF SUCH MATERIALS, OR EQUIPMENT. NOTIFY OWNER WHEN DISCOVERING ASBESTOS MATERIALS. REFER TO SPECIFICATION 'HAZARDOUS MATERIALS PROCEDURES AND CONTROL' AND 'HAZARDOUS MATERIALS ABATEMENT AND CONTROL.'
14. THE CONTRACTOR SHALL MEET AND FOLLOW ALL (NPDES) NATIONAL POLLUTANT DISCHARGE ELIMINATION SYSTEM REQUIREMENTS IN EFFECT AT THE TIME OF CONSTRUCTION.
15. SHOULD IT APPEAR THAT THE WORK TO BE DONE OR ANY MATTER RELATIVE THERETO IS NOT SUFFICIENTLY DETAILED OR EXPLAINED ON THESE PLANS, THE CONTRACTOR SHALL CONTACT THE ENGINEER FOR SUCH FURTHER EXPLANATIONS AS MAY BE NECESSARY.
16. CONTRACTOR SHALL ARRANGE, INSTALL, AND PAY FOR ANY TEMPORARY UTILITIES, INCLUDING BUT NOT LIMITED TO TELEPHONE, ELECTRIC, SEWER, WATER, ETC.. THE CONTRACTOR IS TO COORDINATE ANY SUCH UTILITY NEEDS WITH THE OWNER.
17. ALL SITE AREAS SHALL BE GRADED AT 1% MINIMUM FOR DRAINAGE UNLESS OTHERWISE NOTED OR ALONG FLOWLINES OF CONCRETE LINED GUTTERS AND VALLEY GUTTERS.
18. ESTIMATED EARTHWORK QUANTITIES SHOWN ARE APPROXIMATE ONLY AND SHOWN FOR THE PURPOSES OF ESTIMATING GRADING PERMIT FEES, HOHBACH-LEWIN ASSUMES NO LIABILITY FOR THE ACCURACY OF THESE QUANTITIES.
19. WHERE EXISTING STRUCTURES ARE TO REMAIN IN CONSTRUCTION ZONE AREA, CONTRACTOR SHALL ADJUST RIMS OF THESE STRUCTURES, I.E. CATCH BASINS, VALVE BOXES, CLEAN OUTS, UTILITY BOXES, ETC. TO NEW FINISH GRADE.
20. CONTRACTOR SHALL CONTACT UNDERGROUND SERVICE ALERT FOR NORTHERN CALIFORNIA AT LEAST 48 HOURS (2 WORKING DAY) PRIOR TO COMMENCEMENT OF CONSTRUCTION. (800) 227-2600.
21. THE ORGANIC MATERIAL COVERING THE SITE SHALL BE STRIPPED AND STOCKPILED. THE STRIPPINGS SHALL BE USED TO BACKFILL ALL LANDSCAPE PLANTERS AND ROUGH GRADE MOUND AREAS, AS SHOWN ON LANDSCAPE DRAWINGS, TO WITHIN 1" OF GRADES SHOWN. EXCESS STRIPPINGS AND EXCAVATED MATERIAL SHALL BE REMOVED FROM THE SITE BY THE CONTRACTOR.
22. ADJUSTMENTS TO PAD ELEVATIONS OR PARKING LOT GRADES TO ACHIEVE EARTHWORK BALANCE SHALL BE MADE ONLY WITH APPROVAL OF THE ENGINEER.
23. COMPACTION TO BE DETERMINED USING ASTM D1557-LATEST EDITION.
24. STORM DRAIN PIPES DESIGNATED AS SD FROM 4" TO 24" IN DIAMETER SHALL BE SDR-35 PVC. (GREEN-TITE PIPE BY MANVILLE OR APPROVED EQUAL), CLASS HDPE SMOOTH INTERIOR PIPE PER ASTM D3212 HANCOR SURE-LOK WT PIPE OR APPROVED EQUAL WITH CLASS 1 BACKFILL OR DUCTILE IRON PIPE DIP, IF SPECIFIED ON PLANS. NO MATERIAL SUBSTITUTE SHALL BE ALLOWED FOR DUCTILE IRON PIPE. ANY PIPES LARGER THAN 24" IN DIAMETER SHALL BE CLASS III REINFORCED CONCRETE PIPE RCP. PVC PIPE EXCEEDING 24" DIAMETER SHALL ONLY BE USED WHEN APPROVED BY MANUFACTURER IN THIS JURISDICTION.
25. PROPOSED SPOT GRADES (ELEVATIONS) SHOWN HEREON ARE FINISHED PAVEMENT GRADES, NOT TOP OF CURB GRADES, UNLESS NOTED OTHERWISE.
26. THE CONTRACTOR SHALL VERIFY THE CONTENTS AND THICKNESS OF THE BUILDING SLAB SECTION (IE: CONCRETE, SAND, ROCK) WITH THE STRUCTURAL PLANS AND THE ELEVATIONS SHOWN HEREON PRIOR TO COMMENCEMENT OF GRADING.
27. ALL WORK SHALL BE PERFORMED IN ACCORDANCE WITH APPLICABLE O.S.H.A. REGULATIONS.
28. CONSTRUCTION CONTRACTOR AGREES THAT IN ACCORDANCE WITH GENERALLY ACCEPTED CONSTRUCTION PRACTICES, CONSTRUCTION CONTRACTOR WILL BE REQUIRED TO ASSUME SOLE AND COMPLETE RESPONSIBILITY FOR JOB SITE CONDITIONS DURING THE COURSE OF CONSTRUCTION OF THE PROJECT, INCLUDING SAFETY OF ALL PERSONS AND PROPERTY; THAT THIS REQUIREMENT SHALL BE MADE TO APPLY CONTINUOUSLY AND NOT BE LIMITED TO NORMAL WORKING HOURS, AND CONSTRUCTION CONTRACTOR FURTHER AGREES TO DEFEND, INDEMNIFY AND HOLD DESIGN PROFESSIONAL HARMLESS FROM ANY AND ALL LIABILITY, REAL OR ALLEGED, IN CONNECTION WITH THE PERFORMANCE OF WORK ON THIS PROJECT, EXCEPTING LIABILITY ARISING FROM THE SOLE NEGLIGENCE OF DESIGN PROFESSIONAL.
29. WHERE OFF-SITE DRIVEWAY APPROACHES ARE TO BE CONSTRUCTED THE ON-SITE DRIVEWAY SHALL NOT BE CONSTRUCTED UNTIL THE OFF-SITE IMPROVEMENTS ARE INSTALLED. THE ON-SITE DRIVEWAY SHALL CONFORM TO THE COMPLETED OFF-SITE DRIVEWAY.

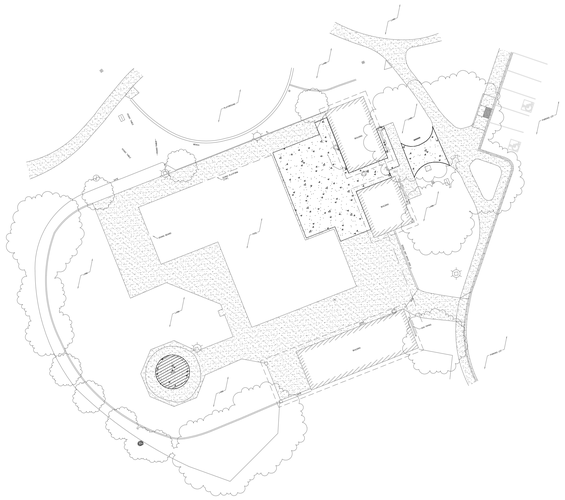

GENERAL NOTES CONTINUATION

GRADING NOTES:

1. UNDERGROUND UTILITY LOCATIONS SHOWN HEREON WERE TAKEN FROM RECORD DATA. NO GUARANTEE IS MADE OR IMPLIED AS TO THE ACCURACY OF SUCH RECORD DATA. NO EXCAVATIONS WERE MADE TO CONFIRM LOCATIONS. CONTRACTORS ARE CAUTIONED TO CONTACT U.S.A. UNDERGROUND AND TO EXERCISE EXTREME CARE IN VERIFYING ALL LOCATIONS PRIOR TO COMMENCING EXCAVATIONS OR OTHER WORK WHICH MAY AFFECT THESE UTILITIES.
2. IRRIGATION LATERALS, PARKING LOT LIGHTING WIRING AND SIGNAL WIRING NOT SHOWN. VERIFY LOCATION BEFORE COMMENCING TRENCHING. REPLACE OR REPAIR IMMEDIATELY WHERE BROKEN TO PROVIDE UNINTERRUPTED SERVICE.
3. ALL FINISH GRADES SHOWN ARE FINISH GRADE ELEVATIONS UNLESS NOTED OTHERWISE.

UTILITY NOTES:

1. THIS SURVEY IS NOT INTENDED TO REPRESENT THE EXACT LOCATIONS, SIZES OR EXTENT OF THE UTILITIES WITHIN THE AREA ENCOMPASSED BY THIS SURVEY. THEREFORE, IT IS THE RESPONSIBILITY OF THE OWNER AND/OR CONTRACTOR TO VERIFY THE LOCATION, SIZE AND EXTENT OF ANY EXISTING UTILITIES PRIOR TO DESIGN OR CONSTRUCTION. CONTRACTORS ARE CAUTIONED TO CONTACT U.S.A. UNDERGROUND AND TO EXERCISE EXTREME CARE IN VERIFYING ALL LOCATIONS PRIOR TO COMMENCING EXCAVATIONS OR OTHER WORK WHICH MAY AFFECT THESE UTILITIES.
2. IRRIGATION LATERALS, PARKING LOT LIGHTING WIRING AND SIGNAL WIRING NOT SHOWN. VERIFY LOCATION BEFORE COMMENCING TRENCHING. REPLACE OR REPAIR IMMEDIATELY WHERE BROKEN TO PROVIDE UNINTERRUPTED SERVICE.
3. UTILITY ABANDONMENT/REMOVAL: DISCONNECT AND CAP PIPES AND SERVICES TO REMAIN. REMOVE ALL PORTIONS OF ALL UTILITIES WITHIN NEW BUILDING FOOTPRINT AND DISPOSE OF OFF-SITE. OTHERWISE ABANDON IN PLACE UNLESS NOTED OTHERWISE.
4. NOTIFY THE ENGINEER IMMEDIATELY OF ANY UTILITIES ENCOUNTERED THAT ARE NOT SHOWN ON THE DRAWINGS. PRESERVE AND REPAIR ANY UTILITIES THAT ARE DAMAGED AND THAT ARE TO REMAIN.
5. CONTRACTOR IS RESPONSIBLE FOR COORDINATING ALL CROSSINGS OF NEW UTILITIES WITH EACH OTHER, AND WITH EXISTING UTILITIES. VERIFY EXISTING PIPE LOCATION AND INVERT PRIOR TO INSTALLING NEW UTILITIES. NOTIFY THE ENGINEER IMMEDIATELY OF ANY DISCREPANCIES OR DEVIATIONS.
6. PRIOR TO CONNECTING TO EXISTING UTILITIES FIELD VERIFY LOCATION 6. & INVERT OR DEPTH PRIOR TO INSTALLING NEW PIPE OR EQUIPMENT.
7. EACH BUILDING WATER SERVICE CONNECTION SHALL BE WITH VALVE AND VALVE BOX SET AT GRADE.
8. ALL BUILDING SEWER LATERALS SHALL BE WITH CLEANOUT TO GRADE.
9. ALL CATCH BASINS WITHIN VEHICULAR AREAS SHALL BE TRAFFIC RATED FOR H20 VEHICULAR LOADS. FOR CATCH BASINS IN WALKWAY AREAS, INCLUDING EXISTING CATCH BASINS, USE HEEL PROOF AND ADA GRATE.

LEGEND

BOUNDARY LINES

- CENTER LINE
- EASEMENT LINE
- PROPERTY LINE
- ADJACENT PROPERTY LINE

MISCELLANEOUS LINES

- SIDEWALK
- LIP OF GUTTER
- FENCE-WIRE
- BIORETENTION AREA

UTILITY LINES

- E — ELECTRIC
- FO — FIBER OPTIC
- FS — FIRE SERVICE
- G — GAS LINE
- IRR — IRRIGATION LINE
- JT — JOINT TRENCH
- NG — NITROGEN GAS
- OH — OVERHEAD
- RW — RECYCLED WATER
- STORM DRAIN
- SS — SANITARY SEWER
- T — TELEPHONE
- W — WATER

UTILITY LEGEND

- FIRE HYDRANT
- WATER VALVE
- WATER METER
- STORM DRAIN MANHOLE
- BACKFLOW PREVENTER
- CATCH BASIN
- AREA DRAIN
- CLEANOUT TO GRADE
- FIRE DEPARTMENT CONNECTION

ADA COMPLIANCE:

1. ALL NEW WORK SHALL CONFORM TO TITLE 24 OF THE CALIFORNIA ADMINISTRATIVE CODE AND THE AMERICANS WITH DISABILITIES ACT 2010 ADA STANDARDS FOR ACCESSIBLE DESIGN, AND ANY LOCAL OR STATE AMENDMENTS THEREOF.
2. ALL NEW CURB RAMPS SHALL NOT EXCEED A SLOPE OF 1:12 (8.33%).
3. ALL NEW ENTRANCE WALKS TO THE BUILDINGS SHALL NOT EXCEED A SLOPE OF 1:20 (5%) LONGITUDINALLY UNLESS RAILINGS ARE PROVIDED IN WHICH CASE THE SLOPE SHALL NOT EXCEED 1:12 (8.33%). SEE ARCHITECTURAL PLANS FOR RAILING REQUIREMENTS.
4. LANDINGS SHALL BE PROVIDED AT PRIMARY ENTRANCES TO BUILDINGS WITH A 2% MAXIMUM SLOPE THE LANDINGS SHALL HAVE A MINIMUM WIDTH OF 60" AND A MINIMUM DEPTH OF 60" WHEN THE DOOR OPENS INTO THE BUILDING, AND 42" PLUS THE WIDTH OF THE DOOR WHEN THE DOOR OPENS ONTO THE LANDING.
5. RAMPS ARE DEFINED AS ANY WALKWAY BETWEEN SLOPES OF 1:20 (5%) AND 1:12 (8.33%), AND SHALL HAVE A MINIMUM WIDTH OF 48" AND A MAXIMUM CROSS-SLOPE OF 2%. RAMPS EXCEEDING 30" VERTICAL DROP SHALL HAVE INTERMEDIATE (2% MAXIMUM SLOPE) LANDINGS HAVING A MINIMUM LENGTH IN THE DIRECTION OF TRAVEL OF 60". BOTTOM LANDINGS AND LANDINGS AT CHANGES IN RAMP DIRECTION SHALL HAVE A MINIMUM LENGTH OF 72".
6. MAXIMUM CROSS-SLOPE ON ANY SIDEWALK OR RAMP SHALL BE 2%. MAXIMUM SLOPE IN ANY DIRECTION WITHIN PARKING STALLS DESIGNATED AS ACCESSIBLE PARKING STALL SHALL BE 2%.

ABBREVIATIONS

AB	AGGREGATE BASE
AC	ASPHALTIC CONCRETE
AD	AREA DRAIN
ATT	AT&T
BC	BACK OF CURB
BFP	BACKFLOW PREVENTER
BLDG	BUILDING
BOL	BOLLARD
BOW	BACK OF WALK
BW	BOTTOM OF WALL
BW/FS	BOTTOM OF WALL/FINISHED SURFACE
C	CONCRETE
CATV	CABLE TV
CB	CATCH BASIN
CONC	CONCRETE
COTG	CLEANOUT TO GRADE
DI	DRAIN INLET
DS	DOWN SPOUT
E	ELECTRIC OR EAST
EW	EACH WAY
EX.	EXISTING
(E)	EXISTING
ELEC	ELECTRIC
ESMT	EASEMENT
G	GAS
GB	GRADE BREAK
FF	FINISHED FLOOR
FG	FINISHED GRADE
FL	FLOWLINE
FM	FORCE MAIN
FNC	FENCE
FS	FINISHED SURFACE
GRN	GROUND
HP	HIGH POINT
INV	INVERT
JP	JOINT POLE
LF	LINEAR FEET
LIP	LIP OF GUTTER
LT	LIGHT
M	MAPS
N	NORTH
NE	NORTHEAST
NW	NORTHWEST
OC	ON CENTER
OH	OVERHEAD
OR	OF RECORD
PERF	PERFORATED PIPE
PGE	PACIFIC GAS & ELECTRIC
POC	POINT OF CONNECTION
PV	PAVEMENT
RC	RELATIVE COMPACTION
RW	RECYCLED WATER
RIM	RIM OF UTILITY OBJECT
S	SOUTH
SD	STORMDRAIN
SE	SOUTHEAST
SJWC	SAN JOSE WATER COMPANY
SS	SANITARY SEWER
SL	STREET LIGHT
SW	SOUTHWEST
T	TREE
TC	TOP OF CURB
TW	TOP OF WALL
TW/FS	TOP OF WALL/FINISHED SURFACE
TYP.	TYPICAL
UON	UNLESS OTHERWISE NOTED
USA	UNDERGROUND SERVICE ALERT
VG	VALLEY GUTTER
W	WATER/WEST/WITH
WM	WATER METER
WTR	WATER
WV	WATER VALVE

SHEET INDEX

C1.0	COVER SHEET
C1.1	NOTES
C2.0	DEMOLITION PLAN
C3.0	GRADING PLAN
C3.1	PAVEMENT PLAN
C4.0	UTILITY PLAN
C5.0	EROSION CONTROL PLAN
C5.0	EROSION CONTROL DETAILS
C6.0	DETAILS
C6.1	DETAILS

NORTH

0 5' 10' 15' 20'

SCALE: 1" = 10'

CALL BEFORE YOU DIG USA 800.227.2600

DISCLAIMER: TOPOGRAPHIC INFORMATION, INCLUDING PROPERTY LINES, EASEMENTS, EXISTING GRADES, EXISTING UTILITIES LOCATIONS, ETC., SHOWN ARE FOR GENERAL REFERENCE ONLY AND HAVE BEEN PROVIDED BY OTHERS AND HAVE NOT BEEN INDEPENDENTLY VERIFIED BY HOHBACH-LEWIN, INC.

PBK

BERKELEY

2600 TENTH STREET, SUITE 700

BERKELEY, CA 94710-2597

510-450-1999 P

HONEYBEE POOL RENOVATION

CITY OF ROHNERT PARK

1170 GOLF COURSE DRIVE

ROHNERT PARK, CA 94928

LICENSED ARCHITECT LOREN GACHEN C-37926 Exp. 12/31/23 STATE OF CALIFORNIA

REGISTERED PROFESSIONAL ENGINEER DANIEL G. KAMIN NO. C38406 CIVIL STATE OF CALIFORNIA

CONSULTANT

HOHBACH-LEWIN, INC.

STRUCTURAL & CIVIL ENGINEERS

260 Sheridan Avenue, Suite 150

Palo Alto, CA 94306

(650) 617-5930, Fax (650) 617-5932

VANESSA GARRETT P.E. CE84141 — DATE

CITY ENGINEER

REVISION SCHEDULE

NO	DATE	BY	DESCRIPTION
1	5/25/2022		AGENCY PLAN REVIEW
2	12/02/2022		AGENCY PLAN REVIEW

DRAWN: BKB — CHECKED: BJH

DATE: 02/25/2022 — SCALE:

PROJECT NUMBER: 2010200

COVER SHEET

DRAWING NUMBER: C1.0

Plot Date: Dec 5, 2022, 9:42 AM

HOHBACH-LEWIN # 15922-31

AGENCY BACKCHECK

CAUTION:

1. THE LOCATIONS, SIZES AND/OR DEPTHS OF EXISTING UNDERGROUND UTILITIES AS SHOWN ON THIS PLAN WERE OBTAINED FROM SOURCES OF VARYING RELIABILITY. THE CONTRACTOR IS CAUTIONED THAT ONLY ACTUAL EXCAVATION WILL REVEAL THE TYPES, EXTENT, SIZES, LOCATIONS AND DEPTHS OF SUCH UNDERGROUND UTILITIES. (A REASONABLE EFFORT HAS BEEN MADE TO LOCATE AND DELINEATE ALL KNOWN UNDERGROUND UTILITIES). CONTRACTOR SHALL VERIFY LOCATION AND DEPTH PRIOR TO ANY EXCAVATION OR IMPROVEMENT.
2. CONTRACTOR SHALL CONTACT UNDERGROUND SERVICE ALERT FOR LOCATION OF UNDERGROUND UTILITIES AT LEAST 48 HOURS PRIOR TO COMMENCEMENT OF CONSTRUCTION– PHONE (800) 642–2444. CONTRACTOR SHALL VERIFY ALL EXISTING UTILITIES PRIOR TO BEGINNING ANY WORK ON THIS SITE.
3. THESE DRAWINGS DO NOT ADDRESS CONTRACTOR MEANS, METHODS OR PROCESSES THAT MAY BE ASSOCIATED WITH ANY TOXIC SOILS IF FOUND ON SITE. THE CONTRACTOR IS RESPONSIBLE FOR COMPLYING WITH ALL CITY AND COUNTY STANDARDS AND APPROPRIATE REGULATIONS IF TOXIC SOILS ARE ENCOUNTERED. CONTRACTOR MUST NOTIFY THE OWNER'S PROJECT MANAGER IMMEDIATELY IF ANY SOILS ARE EVEN SUSPECTED OF BEING CONTAMINATED.

GENERAL SITE NOTES:

1. CONTRACTOR SHALL VISIT THE SITE PRIOR TO BIDDING ON THIS WORK AND CONSIDER THE EXISTING CONDITIONS AND SITE CONSTRAINTS IN THE BID. CONTRACTOR SHALL BE IN THE POSSESSION OF AND FAMILIAR WITH ALL APPLICABLE GOVERNING AGENCIES STANDARD DETAILS AND SPECIFICATIONS PRIOR TO SUBMITTING OF A BID.
2. ALL WORK IN THE PUBLIC RIGHT–OF–WAY SHALL CONFORM TO ALL APPLICABLE GOVERNING AGENCIES STANDARD DETAILS & SPECIFICATIONS.
3. PRIOR TO BEGINNING WORK, AND AFTER INITIAL HORIZONTAL CONTROL STAKING, CONTRACTOR SHALL FIELD CHECK ALL ELEVATIONS MARKED WITH (E) AND REPORT ANY DISCREPANCIES GREATER THAN 0.05' TO OWNER'S PROJECT MANAGER.
4. DAMAGE TO ANY EXISTING SITE IMPROVEMENTS, UTILITIES AND/OR SERVICES TO REMAIN SHALL BE RESPONSIBILITY OF THE CONTRACTOR. CONTRACTOR SHALL REPAIR AND/OR REPLACE IN KIND.
5. CONTRACTOR SHALL REPLACE ALL STRUCTURES AND GRATE LIDS FOR VAULTS, CATCHBASINS, ETC.., WITH VEHICULAR–RATED STRUCTURES IN ALL TRAFFIC ACCESSIBLE AREAS.
6. CONTRACTOR SHALL MAINTAIN THE EXISTING SITE IN A SAFE AND USABLE MANNER SUCH THAT EMERGENCY VEHICLE ACCESS IS AVAILABLE AT ALL TIMES. CONTRACTOR TO SUPPLY, INSTALL AND MAINTAIN ALL NECESSARY FENCING, GATES, SIGNAGE, TEMPORARY WALKWAYS, AND PROVISIONS FOR ENSURING THE PROJECT'S SECURITY AND SAFE PASSAGEWAY AROUND IT BY CAMPUS STAFF, STUDENTS AND VISITORS AT ALL TIMES.
7. CONTRACTOR TO BE RESPONSIBLE FOR OBTAINING ALL NECESSARY & REQUIRED PERMITS FOR THIS WORK.
8. NOTIFICATION PRIOR TO THE START OF THE WORK MUST BE GIVEN TO THE UNDERGROUND SERVICE ALERT (USA).
9. CONTRACTOR SHALL BE RESPONSIBLE FOR ACQUIRING APPROVAL FROM DISTRICT PERSONNEL AND PROJECT ARCHITECT FOR THE LOCATION OF ALL STAGING, STORAGE, CONSTRUCTION OFFICE AND LAY DOWN AREAS.
10. CONSTRUCTION HOURS TO BE VERIFIED AND APPROVED BY DISTRICT AND LOCAL AGENCIES.
11. CONTRACTOR MUST HAVE OWNER'S REPRESENTATIVE OR ENGINEER/ARCHITECT FIELD REVIEW AND APPROVE FORMWORK PRIOR TO PLACING SITE CONCRETE FOR CURBS, RAMPS, STAIRS, WALKS, DRIVEWAYS AND RELATED FLATWORK.
12. IF ARCHEOLOGICAL MATERIALS ARE UNCOVERED DURING GRADING, TRENCHING OR OTHER ON–SITE EXCAVATION, ALL WORK ON THE SITE SHALL BE STOPPED AND THE CITY IMMEDIATELY NOTIFIED. THE COUNTY CORONER & THE NATIVE AMERICAN HERITAGE COMMISSION SHALL ALSO BE NOTIFIED AND PROCEDURES FOLLOWED AS REQUIRED IN APPENDIX "K" OF THE CALIFORNIA ENVIRONMENTAL ACT.
13. CONTRACTOR TO COORDINATE WITH SCHOOL PERSONNEL AND ENSURE HIS/HER WORK DOES NOT IMPACT SCHOOL OPERATION AND TRAFFIC CIRCULATION OF BUSSES, EMERGENCY VEHICLES, STAFF AND STUDENT VEHICLES.

SITE MAINTENANCE:

1. CONTRACTOR SHALL: GATHER ALL CONSTRUCTION DEBRIS ON A REGULAR BASIS AND PLACE IT IN A DUMPSTER OR OTHER CONTAINER WHICH IS EMPTIED OR REMOVED ON A REGULAR BASIS. WHEN APPROPRIATE, USE TARPS ON THE GROUND TO COLLECT FALLEN DEBRIS OR SPLATTERS THAT COULD CONTRIBUTE TO STORM WATER RUNOFF POLLUTION.
2. REMOVE ALL DIRT, GRAVEL, RUBBISH, REFUSE, AND GREEN WASTE FROM STREET PAVEMENT AND STORM DRAINS ADJOINING THE SITE. LIMIT CONSTRUCTION ACCESS ROUTES ONTO THE SITE AND PLACE GRAVEL PADS AT THESE LOCATIONS. DO NOT DRIVE VEHICLES AND EQUIPMENT OFF THE PAVED OR GRAVELED AREAS DURING WET WEATHER.
3. SWEEP OR VACUUM THE STREET PAVEMENT AND SIDEWALKS ADJOINING THE PROJECT SITE AND THE ON–SITE PAVED AREAS ON A DAILY BASIS. SCRAPE CAKED–ON MUD AND DIRT FROM THESE AREAS BEFORE SWEEPING. CORNERS AND HARD TO REACH AREAS SHALL BE SWEPT MANUALLY.
4. IF THE STREETS, SIDEWALKS AND/OR PARKING LOT ARE PRESSURE WASHED, DEBRIS MUST BE TRAPPED AND COLLECTED TO PREVENT ENTRY INTO THE STORM DRAIN SYSTEM. NO CLEANING AGENT MAY BE DISCHARGED INTO THE STORM DRAIN. IF ANY CLEANING AGENT OR DEGREASER IS USED, WASH WATER MUST BE COLLECTED AND DISCHARGED TO THE SANITARY SEWER, SUBJECT TO THE APPROVAL OF THE OWNER'S PROJECT MANAGER, OR OTHERWISE DISPOSED OF THROUGH APPROVED DISPOSAL METHODS.
5. CREATE A CONTAINED AND COVERED AREA ON THE SITE FOR THE STORAGE OF BAGS, CEMENT, PAINTS, OILS, FERTILIZERS, PESTICIDES, OR OTHER MATERIALS USED ON THE SITE THAT HAVE THE POTENTIAL OF BEING DISCHARGED INTO THE STORM DRAIN SYSTEM THROUGH EITHER BEING WIND–BLOWN OR IN THE EVENT OF A MATERIAL SPILL.
6. NEVER CLEAN MACHINERY, EQUIPMENT OR TOOLS INTO A STREET, GUTTER OR STORM DRAIN.
7. ENSURE THAT CEMENT TRUCKS, PAINTERS, OR STUCCO/PLASTER FINISHING CONTRACTORS DO NOT DISCHARGE WASH WATER FROM EQUIPMENT, TOOLS OR RINSE CONTAINERS INTO GUTTERS OR DRAINS.
8. PREVENT DUST FROM LEAVING THE SITE AND ACCUMULATING ON ADJACENT AREAS AS REQUIRED IN THE DUST CONTROL NOTES ON THIS SHEET.
9. PREVENT SEDIMENT LADEN STORM RUN–OFF FROM LEAVING THE SITE OR ENTERING STORM DRAIN OR SANITARY SEWER SYSTEMS AS REQUIRED IN THE EROSION AND SEDIMENTATION CONTROL NOTES ON THIS SHEET.
10. MAINTAIN EXISTING TREES AND PLANTS THAT ARE TO REMAIN AS REQUIRED BY THE TREE AND PLANT PROTECTION NOTES ON THIS SHEET.

DUST CONTROL:

1. WATER TRUCKS SHALL BE PRESENT AND IN USE AT THE CONSTRUCTION SITE. ALL PORTIONS OF THE SITE SUBJECT TO BLOWING DUST SHALL BE WATERED AS OFTEN AS DEEMED NECESSARY BY THE APPROPRIATE GOVERNMENTAL AGENCY IN ORDER TO ENSURE PROPER CONTROL OF BLOWING DUST FOR THE DURATION OF THE PROJECT.
2. WATERING ASSOCIATED WITH ON–SITE CONSTRUCTION ACTIVITY SHALL TAKE PLACE BETWEEN THE ESTABLISHED CONSTRUCTION HOURS AND SHALL INCLUDE AT LEAST ONE LATE–AFTERNOON WATERING TO MINIMIZE THE EFFECTS OF BLOWING DUST.
3. ALL PUBLIC STREETS AND MEDIANS SOILED OR LITTERED DUE TO THIS CONSTRUCTION ACTIVITY SHALL BE CLEANED AND SWEPT ON A DAILY BASIS DURING THE WORK WEEK, OR AS OFTEN AS DEEMED NECESSARY BY THE OWNER'S ENGINEER/INSPECTOR, TO THE SATISFACTION OF THE CITY'S DEPARTMENT OF PUBLIC WORKS.
4. WATERING ON PUBLIC STREETS OR POWER WASHING SEDIMENTATION ON STREETS SHALL NOT OCCUR, UNLESS CONTRACTOR COLLECTS AND FILTERS THE WASH WATER PRIOR TO ITS ENTERING THE CITY'S STORM DRAIN SYSTEM.
5. ON–SITE PAVED ACCESS ROADS, PARKING AREAS, AND STAGING AREAS SHALL BE SWEPT DAILY WITH A WATER SWEEPER.
6. ALL TRUCKS HAULING SOIL, SAND, AND OTHER LOOSE MATERIALS SHALL BE COVERED WITH TARPAULINS OR OTHER EFFECTIVE COVERS.
7. THE SPEED OF ALL VEHICLES DRIVING ON UNPAVED ROADS OR PORTIONS OF THE SITE SHALL BE LIMITED TO 10 MPH.

EROSION AND SEDIMENTATION CONTROL NOTES:

1. EROSION CONTROL MEASURES ARE INTENDED TO PREVENT SEDIMENT AND DEBRIS FROM ENTERING THE CITY, COUNTY STORM DRAIN SYSTEM, SANITARY SEWER SYSTEM OR FROM LEAVING THE SITE. THE CONTRACTOR SHALL MAKE ADJUSTMENTS IN THE FIELD TO MAKE SURE THAT THIS CONCEPT IS CARRIED OUT.
2. EROSION CONTROL FACILITIES AND MEASURES ARE TO BE INSTALLED AND OPERABLE BY OCTOBER 1st AND SHALL CONTINUE IN EFFECT UNTIL DISTURBED AREAS ARE STABILIZED OR UNTIL INSTALLATION OF THE PERMANENT SITE IMPROVEMENTS.
3. CONTRACTOR SHALL ASSUME THE CONCEPTS ON THE EROSION CONTROL PLAN, C5.1, ARE SCHEMATIC MINIMUM REQUIREMENTS, THE FULL EXTENT OF WHICH ARE TO BE DETERMINED BY THE CONTRACTOR. CONTRACTOR IS RESPONSIBLE FOR THE EXACT DESIGN AND EXTENT OF THE EROSION CONTROL SYSTEM SO THAT IT WORKS WITH THE CONTRACTOR'S INTENDED USE AND MANAGEMENT OF THE CONSTRUCTION SITE, AND IS APPROVAL BY THE APPROPRIATE GOVERNMENTAL AGENCIES.
4. ALL EROSION CONTROL FACILITIES SHALL BE INSPECTED BY THE CONTRACTOR AND REPAIRED, AS REQUIRED, AT THE CONCLUSION OF EACH WORKING DAY DURING THE RAINY SEASON. THE CONTRACTOR SHALL INSPECT THE EROSION CONTROL FACILITIES AND MAKE NECESSARY REPAIRS PRIOR TO ANTICIPATED STORMS AND AT REASONABLE INTERVALS DURING STORMS OF EXTENDED DURATION. REPAIRS TO DAMAGED FACILITIES SHALL BE MADE IMMEDIATELY UPON DISCOVERY.
5. AS SOON AS PRACTICAL FOLLOWING EACH STORM, THE CONTRACTOR SHALL REMOVE ANY ACCUMULATION OF SILT OR DEBRIS FROM THE EROSION CONTROL SEDIMENT BASINS AND SHALL CLEAR THE OUTLET PIPES OF ANY BLOCKAGE.
6. PROVISION SHALL BE MADE TO ASSURE THAT BORROW AREAS AND STOCK PILED SOILS ARE PROTECTED FROM EROSION WITH EROSION CONTROL MEASURES SATISFACTORY TO THE APPROPRIATE GOVERNMENTAL AGENCIES.
7. ALL STOCKPILE MATERIALS SHALL BE COVERED AND PROTECTED FROM THE ELEMENTS WITH A NON–PERMEABLE PLASTIC MEMBRANE SO AS TO PREVENT SOIL EROSION FROM OCCURRING. THIS COVER SHALL BE SECURED WITH ANCHORS OR WEIGHTS OF SUFFICIENT SIZE AND FREQUENCY TO PREVENT DISRUPTION OR REMOVAL BY WIND OR RAIN. ANCHORAGE AT THE BASE OF THE SLOPE SHALL BE AS INDICATED BY DETAIL ON THIS SHEET. ALL MEMBRANE AND COVERINGS SHALL BE INSPECTED AND MAINTAINED BY THE CONTRACTOR OR HIS REPRESENTATIVE ON A FREQUENT AND REGULAR BASIS. SPECIFICALLY BEFORE AND AFTER ANY INCLEMENT WEATHER, WITH ANY NECESSARY REPAIRS BEING IMMEDIATELY PERFORMED. COVERINGS SHALL REMAIN IN PLACE UNTIL THE STOCKPILE(S) IS READY TO BE REMOVED FROM THE SITE, AT WHICH TIME THEY MAY BE REMOVED AND DISPOSED OF BY THE CONTRACTOR.
8. EARTHEN BERMS, STRAW–FIBER FILLED TUBES AND/OR GEOTEXTILE FABRIC BARRIER (SILT FENCING) SHALL BE CONSTRUCTED AS SHOWN TO PREVENT OFF–FLOW OF SEDIMENT–LADEN RUNOFF, OR THE EROSION OF BANKS OR ROADWAYS. ALL SUCH TEMPORARY EROSION CONTROL MEASURES SHALL BE REMOVED BY THE CONTRACTOR AS SOON AS CONSTRUCTION IS COMPLETED AND VEGETATION IS ESTABLISHED. HAY BALES SHALL NOT BE USED.
9. ALL PAVED AREAS SHALL BE KEPT CLEAR OF EARTH MATERIAL AND DEBRIS, SWEPT ON A REGULAR BASIS, TO THE SATISFACTION OF THE ON–SITE INSPECTORS.
10. SWEEP OR VACUUM THE STREET PAVEMENT AND SIDEWALKS ADJOINING THE PROJECT SITE AND THE ON–SITE PAVED AREAS ON A DAILY BASIS OR AS REQUIRED BY THE CITY. SCRAPE CAKED–ON MUD AND DIRT FROM THESE AREAS BEFORE SWEEPING. CORNERS AND HARD TO REACH AREAS SHALL BE SWEPT MANUALLY.
11. PERSON RESPONSIBLE FOR EROSION CONTROL IMPLEMENTATION, TO BE DETERMINED.
12. WHEEL WASHERS SHALL BE INSTALLED AND USED TO CLEAN ALL TRUCKS AND EQUIPMENT LEAVING THE CONSTRUCTION SITE. IF WHEEL WASHERS CANNOT BE INSTALLED, TIRES OR TRACKS OF ALL TRUCKS AND EQUIPMENT SHALL BE WASHED OFF BEFORE LEAVING THE CONSTRUCTION SITE.

TREE/PLANT PROTECTION NOTES:

1. PRIOR TO BEGINNING CONSTRUCTION ON SITE, CONTRACTOR SHALL IDENTIFY, CONFIRM WITH OWNER AND PROTECT EXISTING TREES AND PLANTS DESIGNATED AS TO REMAIN.
2. PROVIDE 6 FOOT TALL TREE PROTECTION FENCE WITH DISTINCTIVE MARKING VISIBLE TO CONSTRUCION EQUIPMENT, ENCLOSING DRIP LINES OF TREES DESIGNATED TO REMAIN.
3. WORK REQUIRED WITHIN FENCE LINE SHALL BE HELD TO A MINIMUM, AVOID UNNECESSARY MOVEMENT OF HEAVY EQUIPMENT WITHIN FENCED AREA AND DO NOT PARK ANY VEHICLES UNDER DRIP LINE OF TREES. DO NOT STORE EQUIPMENT OR MATERIALS WITHIN FENCE LINE.
4. PRIOR TO REMOVING ROOTS AND BRANCHES LARGER THAN 2" IN DIAMETER OF TREES OR PLANTS THAT ARE TO REMAIN, CONSULT WITH THE OWNER'S PROJECT MANAGER.
5. ANY GRADE CHANGES GREATER THAN 6" WITHIN THE DRIPLINE OF EXISTING TREES SHALL NOT BE MADE WITHOUT FIRST CONSULTING THE LANDSCAPE ARCHITECT / CIVIL ENGINEER.
6. PROTECT EXISTING TREES TO REMAIN FROM SPILLED CHEMICALS, FUEL OIL, MOTOR OIL, GASOLINE AND ALL OTHER CHEMICALLY INJURIOUS MATERIAL; AS WELL AS FROM PUDDLING OR CONTINUOUSLY RUNNING WATER. SHOULD A SPILL OCCUR, STOP WORK IN THAT AREA AND CONTACT THE CITY'S ENGINEER / INSPECTOR IMMEDIATELY. CONTRACTOR SHALL BE RESPONSIBLE TO MITIGATE DAMAGE FROM SPILLED MATERIAL AS WELL AS MATERIAL CLEAN UP.
7. PROVIDE TEMPORARY IRRIGATION TO ALL TREES AND PLANTS THAT ARE IN OR ADJACENT TO CONSTRUCTION AREAS WHERE EXISTING IRRIGATION SYSTEMS MAY BE AFFECTED BY THE CONSTRUCTION. ALSO PROVIDE TEMPORARY IRRIGATION TO RELOCATED TREES.
8. CONTRACTOR SHALL BE RESPONSIBLE FOR ONGOING MAINTENANCE OF ALL TREES DESIGNATED TO REMAIN AND FOR MAINTENANCE OF RELOCATED TREES STOCKPILED DURING CONSTRUCTION. CONTRACTOR WILL BE REQUIRED TO REPLACE TREES THAT DIE DUE TO LACK OF MAINTENANCE.
9. CONSULT WITH LANDSCAPE ARCHITECT SHOULD SPECIAL CIRCUMSTANCES ARISE OR QUESTIONS ARISE REGARDING THESE PROCEDURES.

DEMOLITION NOTES :

1. DEMOLITION AND CONSTRUCTION WORK MAY BE PERFORMED OVER THE TOP OF AND AROUND TELEPHONE AND POWER SERVICES. CONTRACTOR SHALL WORK BY HAND IN ALL AREAS WHERE THESE SERVICES MIGHT BE HARMED BY LARGER LESS PRECISE EQUIPMENT.
2. THE CONTRACTOR SHALL LOCATE AND CLEARLY MARK (AND THEN PRESERVE THESE MARKERS) FOR THE DURATION OF CONSTRUCTION OF ALL TELEPHONE, DATA, STREET LIGHT, SIGNAL LIGHT AND POWER FACILITIES THAT ARE IN OR NEAR THE AREA OF CONSTRUCTION.
3. CONTRACTOR'S BID IS TO INCLUDE ALL VISIBLE SURFACE AND ALL SUBSURFACE FEATURES IDENTIFIED TO BE REMOVED OR ABANDONED IN THESE DOCUMENTS.
4. THE CONTRACTOR SHALL BE RESPONSIBLE FOR A SITE INSPECTION TO FULLY ACKNOWLEDGE THE EXTENT OF THE DEMOLITION WORK.
5. THE CONTRACTOR SHALL BE RESPONSIBLE FOR OBTAINING ANY AND ALL PERMITS NECESSARY FOR ENCROACHMENT, GRADING, DEMOLITION, AND DISPOSAL OF SAID MATERIALS AS REQUIRED BY PRIVATE, LOCAL AND STATE JURISDICTIONS. THE CONTRACTOR SHALL PAY ALL FEES ASSOCIATED WITH THE DEMOLITION WORK.
6. CONTRACTOR SHALL PAY DISPOSAL FEES.
7. BACKFILL ALL DEPRESSIONS AND TRENCHES FROM DEMOLITION OF FOUNDATIONS & UTILITIES.
8. WITHIN LIMITS OF WORK, REMOVE CURBS, GUTTERS, LANDSCAPING, SIGNAGE, TREES, SHRUBS, ASPHALT, UNDERGROUND PIPES, ETC. AS INDICATED ON THE DRAWINGS.
9. REMOVAL OF LANDSCAPING SHALL INCLUDE ROOTS AND ORGANIC MATERIALS.
10. PRIOR TO BEGINNING DEMOLITION WORK ACTIVITIES, CONTRACTOR SHALL INSTALL EROSION CONTROL MEASURES OUTLINED IN THE EROSION CONTROL PLAN & DETAILS.
11. CONTRACTOR SHALL BE RESPONSIBLE FOR DISPOSING ALL DEMOLITION MATERIALS, OR STORING SELECTED ITEMS BY OWNER'S REPRESENTATIVE AT DESIGNATED LOCATIONS.
12. ABANDONED UTILITIES WITHIN 6 FEET OF THE PROPOSED BUILDING FOOTPRINT SHOULD BE REMOVED IN THEIR ENTIRETY. UTILITIES OUTSIDE THE BUILDING AREA SHOULD BE REMOVED OR ABANDONED IN–PLACE BY LOCATING AND PLUGGING ALL LATERALS AND ENDS OF PIPES WITH CONCRETE, AND THEN FILLING THE ENTIRE PIPE WITH GROUT. REMOVAL OF ANY UTILITIES WILL REQUIRE THAT ALL TRENCHES BE BACKFILLED PER THE SPECIFICATIONS WITH APPROPRIATE TESTS TO VERIFY COMPACTION VALUES.

SITE FENCING NOTES :

1. CONTRACTOR SHALL PROVIDE A CONSTRUCTION FENCE AROUND THE ENTIRE AREA OF DEMOLITION AND CONSTRUCTION, INCLUDING ALL STAGING, STORAGE, CONSTRUCTION OFFICE AND LAYDOWN AREAS.
2. FENCE LOCATION MAY BE ADJUSTED FROM TIME TO TIME AS CONSTRUCTION PROCEEDS TO EXCLUDE SOME AREAS WHERE CONSTRUCTION WORK IS NOT BEING DONE AND THE AREA IS NOT OBJECTIONABLE IN VISUAL APPEARANCE, AT THE DISCRETION AND APPROVAL OF THE DISTRICT STAFF.
3. CONSTRUCTION FENCE SHALL BE A MINIMUM OF A 6' HIGH GALVANIZED CHAIN LINK.
4. CONSTRUCTION FENCE ADDRESSED IN THESE NOTES IS TO MEET MINIMUM SEPARATION REQUIREMENTS FROM CONSTRUCTION SITE AND THE CAMPUS. CONTRACTOR IS REQUIRED TO INSTALL ANY ADDITIONAL FENCING, BARRICADES OR OTHER SAFETY DEVICES NEEDED TO KEEP THE SITE SECURE & SAFE AT ALL TIMES.
5. ALL FENCING SHALL BE INSTALLED AT ONLY LOCATIONS DESIGNATED AND APPROVED BY DISTRICT PERSONNEL, WITH PARTICULAR CARE GIVEN SUCH THAT THE FENCING DOES NOT CREATE A TRAFFIC HAZARD OR NUISANCE, OR RESTRICT CAMPUS CIRCULATION & FIRE EXITING.

GRADING & EARTHWORK NOTES:

1. ALL PAVED AREAS ARE TO SLOPE A MINIMUM OF 1%. ACCESSIBLE STALLS AND LOADING ZONES ARE TO SLOPE AT A MAXIMUM OF 2% IN ANY DIRECTION AND ACCESSIBLE PATHWAYS ARE TO SLOPE AT A MAXIMUM OF 8.33%, WITH A MAXIMUM CROSS–SLOPE OF 2%. ANY AREAS ON THE SITE NOT CONFORMING TO THESE BASIC RULES DUE TO EXISTING CONDITIONS OR DISCREPANCIES IN THE DOCUMENTS ARE TO BE REPORTED TO THE ARCHITECT/ENGINEER PRIOR TO PROCEEDING WITH FORMWORK FOR CURBS AND/OR FLATWORK.
2. CONTRACTOR SHALL DETERMINE EARTHWORK QUANTITIES BASED ON THE TOPOGRAPHIC SURVEY, THE SOILS INVESTIGATION AND THE PROPOSED SURFACE GRADES AND BASE THE BID ACCORDINGLY. ANY DIFFERENCES BETWEEN THE STATE IN WHICH THE PROJECT SITE IS DELIVERED TO THE CONTRACTOR AND THESE DOCUMENTS SHOULD BE NOTED TO THE CIVIL ENGINEER.
3. ALL FILL SHALL BE COMPACTED PER THE CONSTRUCTION SPECIFICATIONS AND THE CONTRACTOR SHALL COORDINATE AND COMPLY WITH THE OWNER'S TESTING AGENCY TO TAKE THE APPROPRIATE TESTS TO VERIFY COMPACTION VALUES.
4. IMPORT SOILS MUST MEET THE REQUIREMENTS OF THE CONSTRUCTION SPECIFICATIONS.
5. COORDINATE THE PLACEMENT OF ALL SLEEVES FOR LANDSCAPE IRRIGATION (WATER AND CONTROL WIRING) AND STREET LIGHTING PRIOR TO THE PLACEMENT OF ANY ASPHALT, BASEROCK OR CONCRETE SURFACING. SEE LANDSCAPE AND SITE ELECTRICAL DRAWINGS.
6. DO NOT ADJUST GRADES ON THIS PLAN WITHOUT PRIOR WRITTEN APPROVAL OF ARCHITECT & ENGINEER.
7. SPOT ELEVATIONS ARE TO FINISHED SURFACE.
8. TOP OF CONCRETE CURBS ARE 0.50' ABOVE TOP OF PAVING ELEVATIONS, U.N.O.
9. ROUGH GRADING TO BE WITHIN 0.1' AND FINISH GRADES ARE TO BE WITHIN 0.05'.
10. SUBGRADES SHALL BE PROOF ROLLED, OR AS INSTRUCTED PER THE CONSTRUCTION SPECIFICATIONS.
11. CONTRACTOR TO GRADE LANDSCAPED (NON PAVED) AREAS TO A FINISH GRADE OF 8" BELOW PROPOSED FINISH GRADE SHOWN ON THE GRADING PLANS. DISTRICT WILL INSTALL TOP 8 INCHES OF TOPSOIL AND PERFORM FINISH GRADING. CONTRACTOR TO GRADE PLANTER & LANDSCAPED AREAS (NON–PAVED AREAS ADJACENT TO BUILDINGS) TO FINISH GRADE 24" BELOW FINISH FLOOR OF BUILDING. DISTRICT TO INSTALL FINAL FILL MATERIAL, AND INSTALL IRRIGATION SYSTEMS.
12. AFTER STAKING FOR HORIZONTAL CONTROL CONTRACTOR SHALL FIELD CHECK ALL ELEVATIONS MARKED WITH (E) AND REPORT ANY DISCREPANCIES GREATER THAN 0.05' TO ARCH/ENGR.
13. ALL EXISTING UTILITY STRUCTURES WITHIN THE AREA OF WORK SHALL HAVE THE LIDS, GRATES, COVERS, ETC. ADJUSTED TO BE FLUSH WITH FINISHED GRADES. CONTRACTOR SHALL IDENTIFY ALL SUCH ITEMS BY USE OF THESE PLANS AND THOROUGH FIELD INVESTIGATION.

EARTHWORK QUANTITY NOTES:

1. THE CONTRACTOR IS RESPONSIBLE FOR DETERMINING THE QUANTITIES OF ALL FORMS OF EARTHWORK ON THIS PROJECT AND BASING THE BID ON THOSE QUANTITIES WITH FULL KNOWLEDGE THAT ADDITIONAL PROCESSES – INCLUDING ENGINEERING – AND QUANTITIES ARE ALSO TO BE INCLUDED IN THE BID PER THE FOLLOWING NOTES.
2. THE CONTRACTOR SHALL MAKE AN INITIAL DETERMINATION OF THE QUANTITIES, BASED ON A DETAILED SITE VISIT, THE TOPOGRAPHIC SURVEY, THE FINISH GRADES SHOWN ON THESE DRAWINGS, THE SIZE AND EXTENT OF FOOTINGS, THE PREPARATION AND MATERIALS USED FOR BUILDING SLABS, PAVEMENT SECTIONS, AND THE SIZE AND DEPTH OF UTILITY TRENCHES, INCLUDING THE UTILITY CONTRACTORS ANTICIPATED RE–USE OF EXISTING MATERIAL FOR BACKFILL IF ANY.
3. THE CONTRACTOR SHALL MEET THE GRADES SHOWN ON THE DRAWINGS, ADJUSTING THE AMOUNT OF IMPORT OR EXPORT AS REQUIRED TO DO SO. NO ASSUMPTIONS SHOULD BE MADE ABOUT THE SITE BALANCING. NO ADJUSTMENTS TO THE GRADES SHALL BE PERMITTED UNLESS SPECIFICALLY APPROVED BY THE ARCH/ENGR IN WRITING AFTER THE IMPACT OF ANY GRADE CHANGES (IMPACT TO RAMPS, STAIRS, WORK BY OTHERS, ETC.) HAS BEEN THOROUGHLY REVIEWED BY THE ARCH/ENGR. WHEN PREPARING THE EARTHWORK BIDS, DO NOT ASSUME ANY CHANGES TO THE FINISHED GRADES SHOWN ON THESE DRAWINGS WILL BE PERMITTED.
4. THE EARTHWORK SPECIFICATIONS HAVE SPECIFIC REQUIREMENTS FOR BRINGING FILL MATERIAL ONTO THE SITE (IMPORT) SINCE THE EXISTING SOILS ARE NOT SUITABLE FOR FILL MATERIAL IN CERTAIN AREAS. THE EARTHWORK SPECIFICATIONS MAY IDENTIFY ALTERNATIVES THAT ALLOW TREATMENT OF EXISTING SOILS TO MINIMIZE IMPORT, HOWEVER MEETING THE GRADES SHOWN ON THESE DRAWINGS MUST ALSO BE CONSIDERED WHEN DETERMINING THE METHOD
5. AFTER THE BID IS AWARDED THE CONTRACTOR SHALL SUBMIT A DETAILED EARTHWORK HANDLING PLAN THAT SHOWS THE INTENT AND LOCATIONS OF EARTH MOVEMENT AND QUANTITIES OF CUT, FILL, IMPORT AND EXPORT AS THE PROJECT WAS BID. PROPOSING ALTERNATIVE PLANS THAT MAY IDENTIFY GRADE ADJUSTMENTS TO MINIMIZE THE DISTANCE SOIL IS MOVED OR TO MINIMIZE IMPORT OR EXPORT WILL NOT RELIEVE THE CONTRACTOR OF THE RESPONSIBILITY OF PREPARING AN EARTHWORK PLAN AS BID.

GENERAL UTILITY SYSTEM NOTES :

1. ALL TRENCHES SHALL BE BACKFILLED PER THE SPECIFICATIONS WITH APPROPRIATE TESTS TO VERIFY COMPACTION VALUES.
2. CONTRACTOR SHALL STAKE LOCATION OF ABOVE GROUND UTILITY EQUIPMENT (HYDRANTS, TRANSFORMERS, ETC.) AND MEET WITH THE APPROPRIATE GOVERNMENTAL AUTHORITY AND PROPER UTILITY AUTHORITY TO REVIEW LOCATION PRIOR TO INSTALLATION. THE APPROPRIATE GOVERNMENTAL AUTHORITY AND PROPER UTILITY AUTHORITY MUST SPECIFICALLY AGREE WITH LOCATION PRIOR TO PROCEEDING WITH THE INSTALLATION.
3. CONTRACTOR SHALL VERIFY (POTHOLE IF NECESSARY) SIZE, MATERIAL, LOCATION AND DEPTH OF ALL SYSTEMS THAT ARE TO BE CONNECTED TO OR CROSSED PRIOR TO THE TRENCHING OR INSTALLATION OF PROPOSED UTILITIES, AND INFORM ENGINEER OF ANY CONFLICTS BEFORE PROCEEDING WITH WORK.
4. CATHODIC PROTECTION IS REQUIRED ON ALL METALLIC FITTINGS AND ASSEMBLIES THAT ARE IN CONTACT WITH THE SOIL. CONTRACTOR IS RESPONSIBLE FOR FULLY ENGINEERING AND INSTALLING THIS SYSTEM AND COORDINATE ANODE AND TEST STATION LOCATIONS WITH OWNER'S ENGINEER. SEE PROJECT SPECIFICATIONS FOR ADDITIONAL CORROSION PROTECTION REQUIREMENTS.
5. CONTRACTOR SHALL VERIFY ALL EXISTING UTILITIES, INVERTS AND LOCATIONS PRIOR TO BEGINNING ANY WORK ON THIS SITE.
6. ALL DRAINAGE STRUCTURES LOCATED IN VEHICULAR TRAFFIC AREAS SHALL HAVE TRAFFIC RATED COVERS AND BOLT–DOWN GRATES. ALL DRAINAGE STRUCTURES IN PEDESTRIAN ACCESSIBLE AREAS SHALL HAVE ADA APPROVED BOLT–DOWN GRATES.
7. ALL UTILITY STRUCTURES WITHIN THE AREA OF WORK SHALL HAVE THE LIDS, GRATES, COVERS, ETC. ADJUSTED TO BE FLUSH WITH FINISHED GRADES. CONTRACTOR SHALL IDENTIFY ALL SUCH ITEMS BY USE OF THESE PLANS AND FIELD INVESTIGATION.
8. SEE LANDSCAPE LAYOUT PLANS FOR IRRIGATION SLEEVE LOCATIONS.
9. ALL EXISTING UTILITY STRUCTURES (CLEANOUTS, VALVES, BOXES, MANHOLES, CB'S, ETC.) SHALL BE RAISED TO FINAL FINISH GRADE AND COMPLETED WITH THE NECESSARY LABOR AND MATERIALS TO BE IN ACCORDANCE WITH DETAILS SHOWN ON THESE PLANS.
13. CLEANOUTS, CATCH BASINS, MANHOLES AND AREA DRAINS ARE TO BE ACCURATELY LOCATED BY THEIR RELATIONSHIP TO THE BUILDING, FLATWORK, BUILDING UTILITIES, AND/OR CURB LAYOUT. NOT BY THE LENGTH OF PIPE SPECIFIED ON THE DRAWINGS. (WHICH IS APPROXIMATE)
14. SEE ELECTRICAL PLANS FOR SITE ELECTRICAL WORK. ADVISE ENGINEER OF ANY CONFLICTS WITH OTHER UTILITIES PRIOR TO BEGINNING WORK.
15. COMPLETE SYSTEMS: ALL UTILITY SYSTEMS ARE DELINEATED IN A SCHEMATIC MANNER ON THESE PLANS. CONTRACTOR IS TO PROVIDE ALL FITTINGS, ACCESSORIES & WORK NECESSARY TO COMPLETE THE UTILITY SYSTEM SO THAT IT IS FULLY FUNCTIONING FOR THE PURPOSE INTENDED.
16. SEE SPECIFICATION SECTION 01300 FOR SUBMITTAL REQUIREMENTS OF UTILITY COMPONENTS.

SANITARY SEWER NOTES:

1. INSTALL DETECTABLE METALIZED WARNING TAPE APPROXIMATELY 18" BELOW THE SURFACE IN NON–PAVED AREAS, AND AT BOTTOM OF BASEROCK FOR PAVED AREAS. GREEN, IMPRINTED WITH "CAUTION–SANITARY SEWER LINE BELOW", CALPICO TYPE 2 OR EQUAL.
2. PUBLIC AND PRIVATE SANITARY SEWER MAIN AND SERVICE LINE 4–INCH THROUGH 8–INCH SHALL BE POLYVINYL CHLORIDE (PVC) SDR 26 SEWER PIPE.
3. WHERE CONNECTION IS TO BE MADE TO AN EXISTING SEWER OR STRUCTURE, SAID EXISTING SEWER OR STRUCTURE SHALL BE UNCOVERED AND CHECKED FOR LOCATION AND ELEVATION PRIOR TO STAKING NEW SEWER DEPTH AND LOCATION. ANY DISCREPANCY BETWEEN THE PLANS AND FIELD INFORMATION SHALL BE REPORTED IMMEDIATELY TO THE ENGINEER.
4. ALL SANITARY SEWER DESIGNED AT 1% OR FLATTER SHALL BE STAKED BY A CIVIL ENGINEER OR LAND SURVEYOR.
5. REFER TO SANITARY SEWER SPECIFICATIONS FOR LABOR AND MATERIAL, TESTING, AND QUALITY CONTROL REQUIREMENTS.
6. MINIMUM SLOPE FOR SITE SANITARY SEWER PIPES SHALL BE PER CURRENT UPC REQUIREMENTS:

   4" @ 2%
   6" @ 1%
   8" & LARGER @ 0.5%

STORM DRAIN NOTES:

1. INSTALL DETECTABLE METALIZED WARNING TAPE APPROXIMATELY 18" BELOW THE SURFACE IN NON–PAVED AREAS, AND AT BOTTOM OF BASEROCK FOR PAVED AREAS. GREEN, IMPRINTED WITH "CAUTION–STORM DRAIN LINE BELOW", CALPICO TYPE 2 OR EQUAL.
2. PAINT THE TOP OF THE CURBS ADJACENT TO EACH CATCH BASIN INSTALLED UNDER THIS WORK OR ADJACENT TO THIS SITE WITH THE WORDS "NO DUMPING – DRAINS TO BAY". WORDING TO BE BLUE 4" HIGH LETTERS ON A PAINTED WHITE BACKGROUND.
3. INSTALL ADA APPROVED GRATES ON ALL DRAINAGE STRUCTURES WITHIN PEDESTRIAN ACCESSIBLE PAVED AREAS. INSTALL BOLT–DOWN GRATES ON ALL DRAINAGE STRUCTURES.
4. WHERE CONNECTION IS TO BE MADE TO AN EXISTING SEWER OR STRUCTURE, SAID EXISTING SEWER OR STRUCTURE SHALL BE UNCOVERED AND CHECKED FOR LOCATION AND ELEVATION PRIOR TO STAKING NEW SEWER DEPTH AND LOCATION. ANY DISCREPANCY BETWEEN THE PLANS AND FIELD INFORMATION SHALL BE REPORTED IMMEDIATELY TO THE ENGINEER.
5. REFER TO STORM SEWER SPECIFICATIONS FOR LABOR AND MATERIAL, TESTING AND QUALITY CONTROL REQUIREMENTS.
6. MINIMUM SLOPE FOR SITE STORM DRAIN PIPES SHALL BE:
   4" @ 2%
   6" @ 1%
   8" & LARGER @ 0.5%
   UNLESS INDICATED OTHERWISE
7. PRIVATE STORM DRAIN LINE 4–INCH THROUGH 12–INCH WITH A MINIMUM OF TWO (2) FEET OF COVER IN NON–TRAFFIC AREAS SHALL BE POLYVINYL CHLORIDE (PVC) SDR 35.
8. PRIVATE STORM DRAIN LINE 6–INCH THROUGH 12–INCH WITH LESS THAN THREE (3) FEET OF COVER IN VEHICULAR TRAFFIC AREAS SHALL BE POLYVINYL CHLORIDE (PVC) C900, RATED 150 PSI CLASS PIPE.

WATER SYSTEM NOTES:

1. INSTALL DETECTABLE METALIZED WARNING TAPE APPROXIMATELY 18" BELOW THE SURFACE IN NON–PAVED AREAS, AND AT BOTTOM OF BASEROCK FOR PAVED AREAS. BLUE, IMPRINTED WITH "CAUTION–WATER–LINE BELOW", CALPICO TYPE 2 OR EQUAL.
2. PROVIDE THRUST BLOCKS OR COMPARABLE RESTRAINTS PER THE LOCAL WATER AGENCY, AT BENDS OF 22 1/2 DEGREES OR GREATER (HORIZONTAL AND VERTICAL), AT SIZE CHANGES AND AT FIRE HYDRANTS PER CITY STANDARD. AWWA C600, SECTION 3.8 UNLESSS NOTED OTHERWISE.
3. PROVIDE MINIMUM OF 3 FEET OF COVER OVER WATER LINES, UNLESS NOTED OTHERWISE.
4. MAINTAIN PUBLIC WATER LINES 10' AWAY FROM PUBLIC SANITARY SEWER LINES.
5. WHERE WATER LINES HAVE TO CROSS SANITARY SEWER LINES, DO SO AT A 90 DEGREE ANGLE AND WATER LINES SHALL BE MINIMUM OF 12" ABOVE TOP OF SANITARY SEWER LINES AND WATERLINE JOINTS SHALL BE A MINIMUM OF 10 FEET FROM SANITARY SEWERS.
6. WATER LINES ARE SHOWN SCHEMATICALLY. CONTRACTOR SHALL IDENTIFY EACH ANGLE AND/OR BEND WITH APPROPRIATE FITTINGS THAT MAY BE REQUIRED TO ACCOMPLISH THE INTENDED DESIGN.
7. BOTTOM OF BACKFLOW PREVENTOR ASSEMBLY TO BE INSTALLED NO GREATER OR LESS THAN 12" FROM FINISH GRADE.
8. THE UNDERGROUND DOMESTIC WATER SYSTEM INSTALLER SHALL OBTAIN ALL APPROVALS AND PERMITS PRIOR TO ORDERING MATERIALS, FABRICATING SYSTEMS OR ANY INSTALLATION.
9. CONTRACTOR TO POTHOLE AND VERIFY LOCATION, DEPTH & SIZE OF P.O.C. TO EXISTING WATERMAIN PRIOR TO INSTALLING ANY NEW WATERMAIN AND ADVISE THE OWNER ENGINEER OF ANY FIELD DISCREPANCIES THAT WILL IMPACT THE DESIGN.
10. REFER TO DOMESTIC WATER SPECIFICATIONS FOR LABOR AND MATERIAL, TESTING AND QUALITY CONTROL REQUIREMENTS.
11. PUBLIC AND PRIVATE WATER MAIN AND WATER SERVICE LINE 4–INCH THROUGH 12–INCH SHALL BE POLYVINYL CHLORIDE (PVC) AND SHALL MEET AWWA C900, RATED FOR 200 PSI CLASS PIPE WITH EPOXY COATED DUCTILE IRON FITTINGS AND FUSION EPOXY COATED GATE VALVES.
12. ALL WATER LINES 3" OR SMALLER SHALL BE TYPE K COPPER WITH SILVER BRAZED JOINTS. CONTRACTOR TO VERIFY PRESSURES FROM EXISTING LINES ARE ADEQUATE TO SERVICE BUILDINGS AS SPECIFIED BY THE PLUMBING PLANS.

DISCLAIMER: TOPOGRAPHIC INFORMATION, INCLUDING PROPERTY LINES, EASEMENTS, EXISTING GRADES, EXISTING UTILITIES LOCATIONS, ETC., SHOWN ARE FOR GENERAL REFERENCE ONLY AND HAVE BEEN PROVIDED BY OTHERS AND HAVE NOT BEEN INDEPENDENTLY VERIFIED BY HOHBACH-LEWIN, INC.

Plot Date: Dec 5, 2022 - 9:42 AM

HOHBACH-LEWIN #15582.31

PBK

BERKELEY
2600 TENTH STREET, SUITE 700
BERKELEY, CA 94710-2597
510-450-1999 P

HONEYBEE POOL RENOVATION

CITY OF ROHNERT PARK
1170 GOLF COURSE DRIVE
ROHNERT PARK, CA 94928

LICENSED ARCHITECT
LOREN GACHEN
C-37926
Ren. Date 12/31/23
STATE OF CALIFORNIA

REGISTERED PROFESSIONAL ENGINEER
DANIEL G. LEWIN
NO. C38406
STATE OF CALIFORNIA

CONSULTANT

HOHBACH-LEWIN, INC.
STRUCTURAL & CIVIL ENGINEERS
260 Sheridan Avenue, Suite 150
Palo Alto, CA 94306
(650) 617-5930, Fax (650) 617-5932

VANESSA GARRETT P.E. CE84141 — DATE
CITY ENGINEER

REVISION SCHEDULE

NO	DATE	BY	DESCRIPTION
1	5/25/2022		AGENCY PLAN REVIEW
2	12/02/2022		AGENCY PLAN REVIEW

DRAWN: BKB	**CHECKED:** BJH
DATE: 02/25/2022	**SCALE:**
PROJECT NUMBER: 2010200	

NOTES

DRAWING NUMBER: **C1.1**

AGENCY BACKCHECK

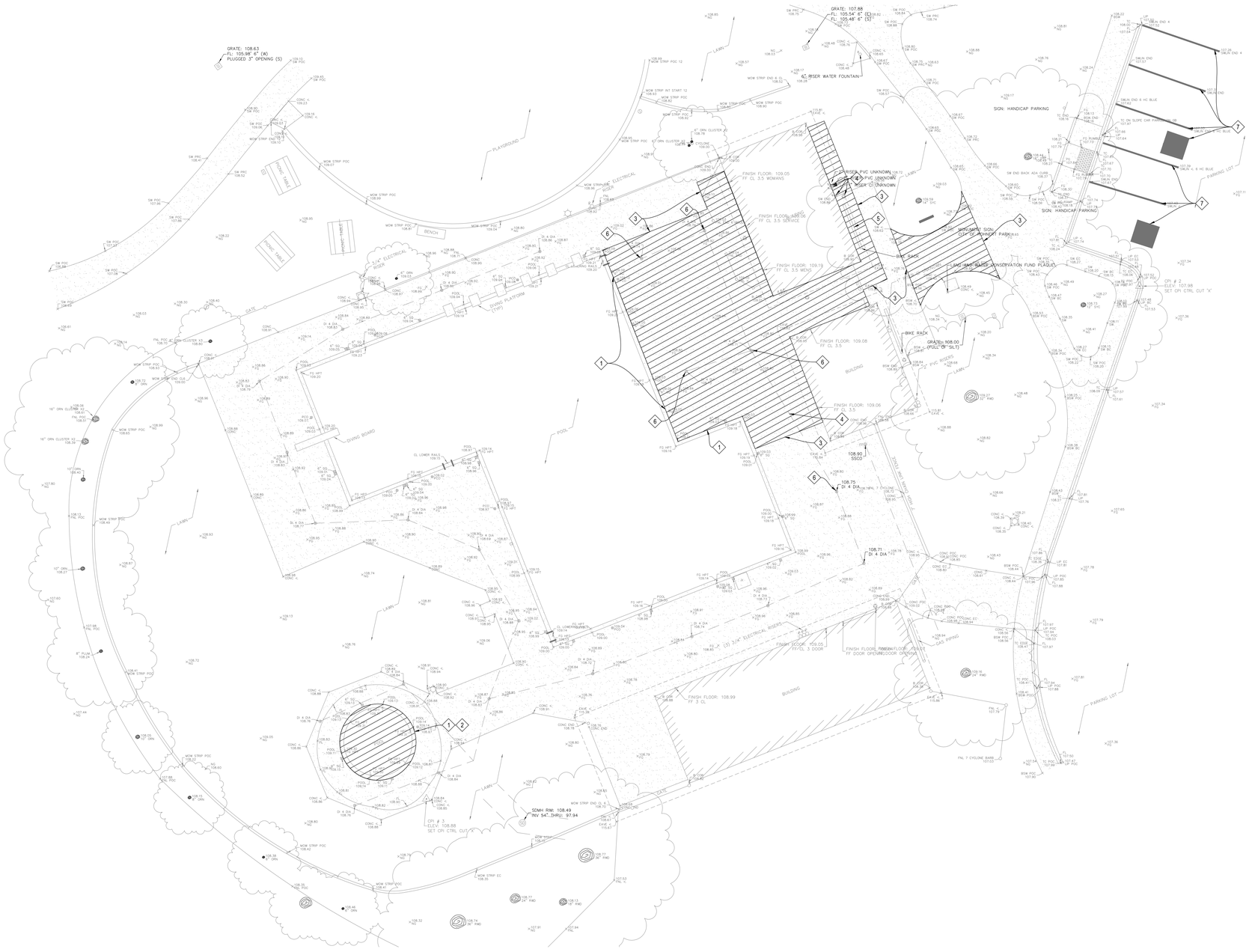

DEMOLITION LEGEND

- ✕ TREE TO BE REMOVED, SEE LANDSCAPE PLANS.
- DEMOLITION AREA - ALL SITE FEATURES WITHIN THIS AREA ARE TO BE REMOVED, UNLESS NOTED TO REMAIN.
- EXISTING BUILDING STRUCTURE TO BE DEMOLISHED
- TREE PROTECTION TREES TO REMAIN

DEMOLITION KEYNOTES

1. BACK OF COPING LIMIT OF WORK
2. PIPES IN POOL TO BE PLUGED AND CAPPED
3. SAWCUT AT NEAREST JOINT
4. EXISTING UTILITY TO REMAIN
5. EXISTING BIKE RACK TO BE RELOCATED
6. CONTRACTOR SHALL VERIFY LOCATION AND DEPTH OF STORM DRAIN INLET AND REPORT TO ENGINEER
7. EXISTING STRIPING TO BE BLACKEDOUT

DEMOLITION NOTES

1. SEE ELECTRICAL PLANS FOR REMOVAL OR RELOCATION OF ALL ELEC/COMM CONDUITS, BOXES, LINE ETC.
2. SEE UTILITY PLAN FOR ALL NEW TIE-IN LOCATIONS AND ANY INSTANCES OF STORM, SANITARY SEWER, OR WATER BEING RELOCATED, ANY EXISTING UTILITIES NOT BEING USED ARE TO BE REMOVED.
3. ALL EXISTING SERVICES AND UTILITIES THAT ARE TO REMAIN OPERATIONAL SHALL BE RELOCATED AS NECESSARY.
4. ALL TREES THAT ARE TO REMAIN SHALL BE PROTECTED DURING CONSTRUCTION.

NORTH

0 5' 10' 15' 20'

SCALE: 1" = 10'

CALL BEFORE YOU DIG 800.227.2600

DISCLAIMER: TOPOGRAPHIC INFORMATION, INCLUDING PROPERTY LINES, EASEMENTS, EXISTING GRADES, EXISTING UTILITIES LOCATIONS, ETC., SHOWN ARE FOR GENERAL REFERENCE ONLY AND HAVE BEEN PROVIDED BY OTHERS AND HAVE NOT BEEN INDEPENDENTLY VERIFIED BY HOHBACH-LEWIN, INC.

PBK
BERKELEY
2600 TENTH STREET, SUITE 700
BERKELEY, CA 94710-2597
510-450-1999 P

HONEYBEE POOL RENOVATION

CITY OF ROHNERT PARK
1170 GOLF COURSE DRIVE
ROHNERT PARK, CA 94928

REGISTERED ARCHITECT
LOREN GACHEN
C-37926
12/3/23
STATE OF CALIFORNIA

REGISTERED PROFESSIONAL ENGINEER
DANIEL G. HOHBACH
NO. C38406
CIVIL
STATE OF CALIFORNIA

CONSULTANT
HOHBACH-LEWIN, INC.
STRUCTURAL & CIVIL ENGINEERS
260 Sheridan Avenue, Suite 150
Palo Alto, CA 94306
(650) 617-5930, Fax (650) 617-5932

VANESSA GARRETT P.E. CE84141 DATE
CITY ENGINEER

REVISION SCHEDULE

NO	DATE	BY	DESCRIPTION
1	5/25/2022		AGENCY PLAN REVIEW
2	12/02/2022		AGENCY PLAN REVIEW

DRAWN: BKB	CHECKED: BJH
DATE: 02/25/2022	SCALE:
PROJECT NUMBER: 2010200	

DEMOLITION PLAN

DRAWING NUMBER: C2.0

AGENCY BACKCHECK

Plot Date: Dec 5, 2022 - 9:42 AM

HOHBACH-LEWIN #15082.3.1

GRADING LEGEND

XX.XX — GRADE ELEVATION

X% — SLOPE AND DIRECTION

GRADING KEYNOTES

1. SAWCUT AND CONFORM
2. DRINKING FOUNTAIN PER ARCHITECTURAL PANS
3. NEW SLOT DRAIN, SEE UTILITY PLANS
4. REINSTALL EXISTING BIKE RACK
5. PARKING TO BE RESTRIPED, SEE ARCHITECTURAL PLANS AND DETAIL 9/C6.0

BENCHMARK FROM SURVEY

CINQUINI & PASSARINO CONTROL POINT NO. 3, BEING A SET SCRIBED X IN CONCRETE AS SHOWN HEREON.
ELEVATION = 108.88' (NAVD 88)

THE ORTHOMETRIC ELEVATIONS SHOWN HEREON ARE BASED ON THE NORTH AMERICAN VERTICAL DATUM OF 1988 (NAVD 1988) AND WERE DETERMINED BY STATIC GPS TIES TO CGPS STATIONS P197, P198 & P202 WITH PUBLISHED ELLIPSOIDAL HEIGHTS OF (P197 = 1.662'), (P198 = -13.543') AND (P202 = 1917.924'), IN ADDITION TO APPLYING THE NGS GEOID HEIGHT MODEL "GEOID2012B".

BASIS OF BEARINGS

THE BASIS OF BEARINGS FOR THIS SURVEY IS THE CALIFORNIA COORDINATE SYSTEM, ZONE II, NAD 83, EPOCH 2017.50 AS DETERMINED LOCALLY BY A LINE BETWEEN CONTINUOUS GLOBAL POSITIONING SYSTEMS (CGPS) STATION P198 AND STATION P202; BEING NORTH 28°32'50" EAST AS DERIVED FROM GEODETIC VALUES PUBLISHED BY THE CALIFORNIA SPATIAL REFERENCE CENTER (CSRC).

EARTHWORK QUANTITIES *

	CUT (CY)	FILL (CY)
TOTALS	0 CY	19 CY

* QUANTITIES ABOVE ARE BANK VOLUMES

GRADING NOTE

1. HOHBACH-LEWIN WILL NOT BE GIVING ANYMORE CONTROL INFORMATION THEN WHAT IS SHOWN ON THE PLANS. IT'S THE CONTRACTOR'S RESPONSIBILITY TO CHECK INTO THE BASIS OF BEARING AND BENCHMARK USED FOR THE TOPOGRAPHIC SURVEY. HOHBACH-LEWIN WILL NOT BE GIVING ANY CONTROL POINTS FOR STAKING

NORTH

0 5' 10' 15' 20'

SCALE: 1" = 10'

CALL BEFORE YOU DIG 800-227-2600

DISCLAIMER: TOPOGRAPHIC INFORMATION, INCLUDING PROPERTY LINES, EASEMENTS, EXISTING GRADES, EXISTING UTILITIES LOCATIONS, ETC., SHOWN ARE FOR GENERAL REFERENCE ONLY AND HAVE BEEN PROVIDED BY OTHERS AND HAVE NOT BEEN INDEPENDENTLY VERIFIED BY HOHBACH-LEWIN, INC.

PBK
BERKELEY
2600 TENTH STREET, SUITE 700
BERKELEY, CA 94710-2597
510-450-1999 P

HONEYBEE POOL RENOVATION

CITY OF ROHNERT PARK
1170 GOLF COURSE DRIVE
ROHNERT PARK, CA 94928

LICENSED ARCHITECT — LOREN GACHEN — C-37926 — Exp. 12/31/23 — STATE OF CALIFORNIA

REGISTERED PROFESSIONAL ENGINEER — DANIEL G. TOMPKINS — NO. C38406 — CIVIL — STATE OF CALIFORNIA

CONSULTANT
HOHBACH-LEWIN, INC.
STRUCTURAL & CIVIL ENGINEERS
260 Sheridan Avenue, Suite 150
Palo Alto, CA 94306
(650) 617-5930, Fax (650) 617-5932

VANESSA GARRETT P.E. CE84141 — DATE
CITY ENGINEER

REVISION SCHEDULE

NO	DATE	BY	DESCRIPTION
1	5/25/2022		AGENCY PLAN REVIEW
2	12/02/2022		AGENCY PLAN REVIEW

DRAWN: BKB — CHECKED: BJH
DATE: 02/25/2022 — SCALE:
PROJECT NUMBER: 2010200

GRADING PLAN

DRAWING NUMBER: C3.0

Plot Date: Dec 5, 2022 - 9:43 AM

H:\PBK\CH-LEWIN #15952-31

AGENCY BACKCHECK

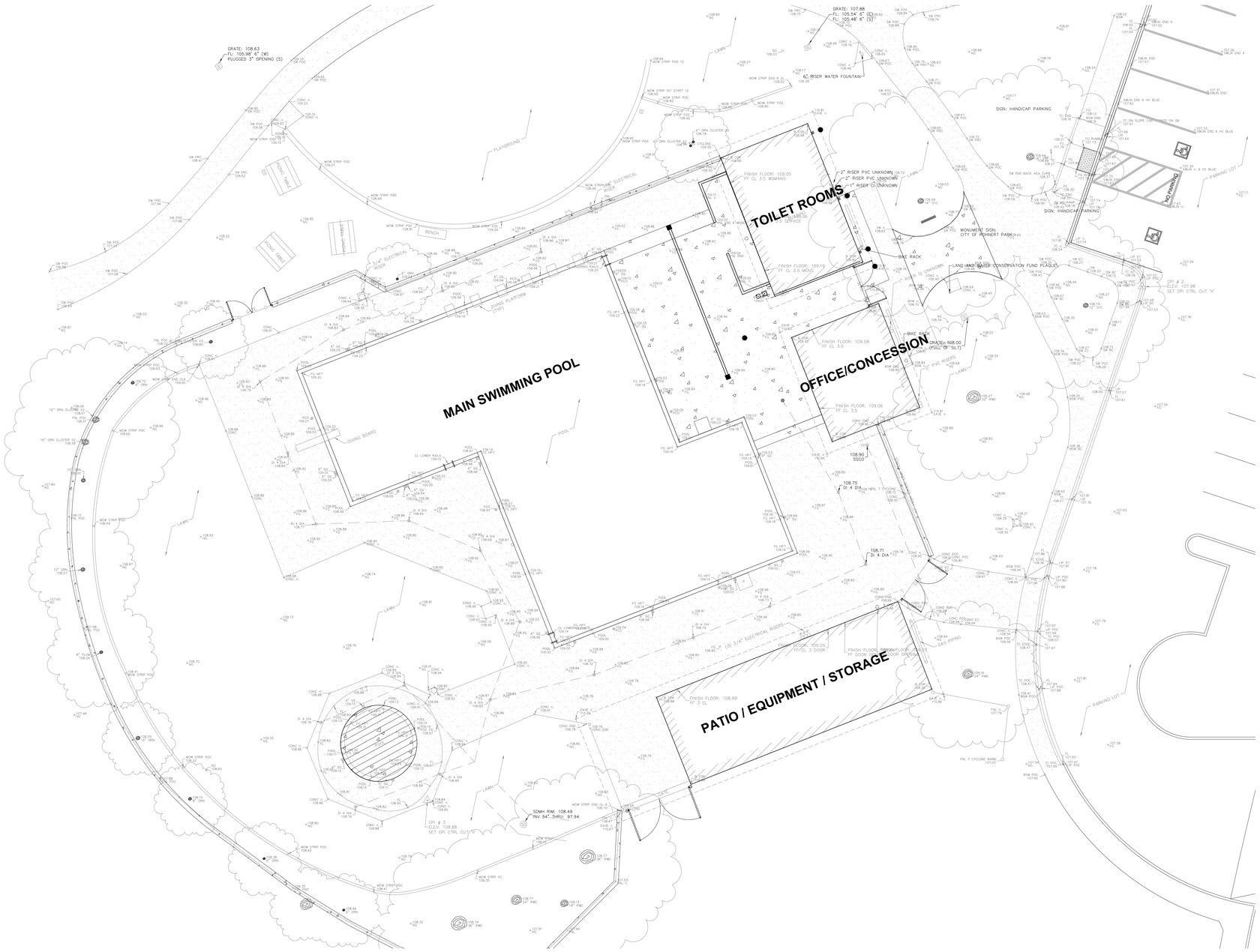

PAVEMENT LEGEND

CONCRETE PAVEMENT SURFACES TO HAVE 28-DAY COMPRESSIVE STRENGTH OF AT LEAST 3,200 PSI. CONCRETE PAVING IN VEHICULAR TRAVEL AREA TO MEET ADTT (AVERAGE DAILY TRUCK TRAFFIC) OF 1.

	SIDEWALK CONCRETE	5" CONCRETE W/ #4 @ 12" O.C. E.W. OVER 6" CLASS 2 BASEROCK COMPACTED TO 95% R.C. OVER NATIVE SOILS COMPACTED TO 90% R.C.
	FORMER WADING POOL FLATWORK	5" CONCRETE W/ #4 @ 12" O.C. E.W. OVER 18" - 36" CLASS 2 BASEROCK COMPACTED TO 95% R.C. OVER NATIVE SOILS COMPACTED TO 90% R.C.

NORTH

0 5' 10' 15' 20'

SCALE: 1" = 10'

CALL BEFORE YOU DIG 800.227.2600

DISCLAIMER: TOPOGRAPHIC INFORMATION, INCLUDING PROPERTY LINES, EASEMENTS, EXISTING GRADES, EXISTING UTILITIES LOCATIONS, ETC., SHOWN ARE FOR GENERAL REFERENCE ONLY AND HAVE BEEN PROVIDED BY OTHERS AND HAVE NOT BEEN INDEPENDENTLY VERIFIED BY HOHBACH-LEWIN, INC.

PBK
BERKELEY
2600 TENTH STREET, SUITE 700
BERKELEY, CA 94710-2597
510-450-1999 P

HONEYBEE POOL RENOVATION

CITY OF ROHNERT PARK
1170 GOLF COURSE DRIVE
ROHNERT PARK, CA 94928

LICENSED ARCHITECT LOREN GACHEN C-37926 Exp. 12/31/22 STATE OF CALIFORNIA

REGISTERED PROFESSIONAL ENGINEER DANIEL G. FAIRCHILD NO. C38406 CIVIL STATE OF CALIFORNIA

CONSULTANT
HOHBACH-LEWIN, INC.
STRUCTURAL & CIVIL ENGINEERS
260 Sheridan Avenue, Suite 150
Palo Alto, CA 94306
(650) 617-5930, Fax (650) 617-5932

VANESSA GARRETT P.E. CE84141 — DATE
CITY ENGINEER

REVISION SCHEDULE

NO	DATE	BY	DESCRIPTION
1	5/25/2022		AGENCY PLAN REVIEW
2	12/02/2022		AGENCY PLAN REVIEW

DRAWN: BKB	CHECKED: BJH
DATE: 02/25/2022	SCALE:
PROJECT NUMBER: 2010200	

PAVEMENT PLAN

DRAWING NUMBER: C3.1

HOHBACH-LEWIN F15522-31

AGENCY BACKCHECK

Plot Date: Dec 5, 2022, 9:43 AM

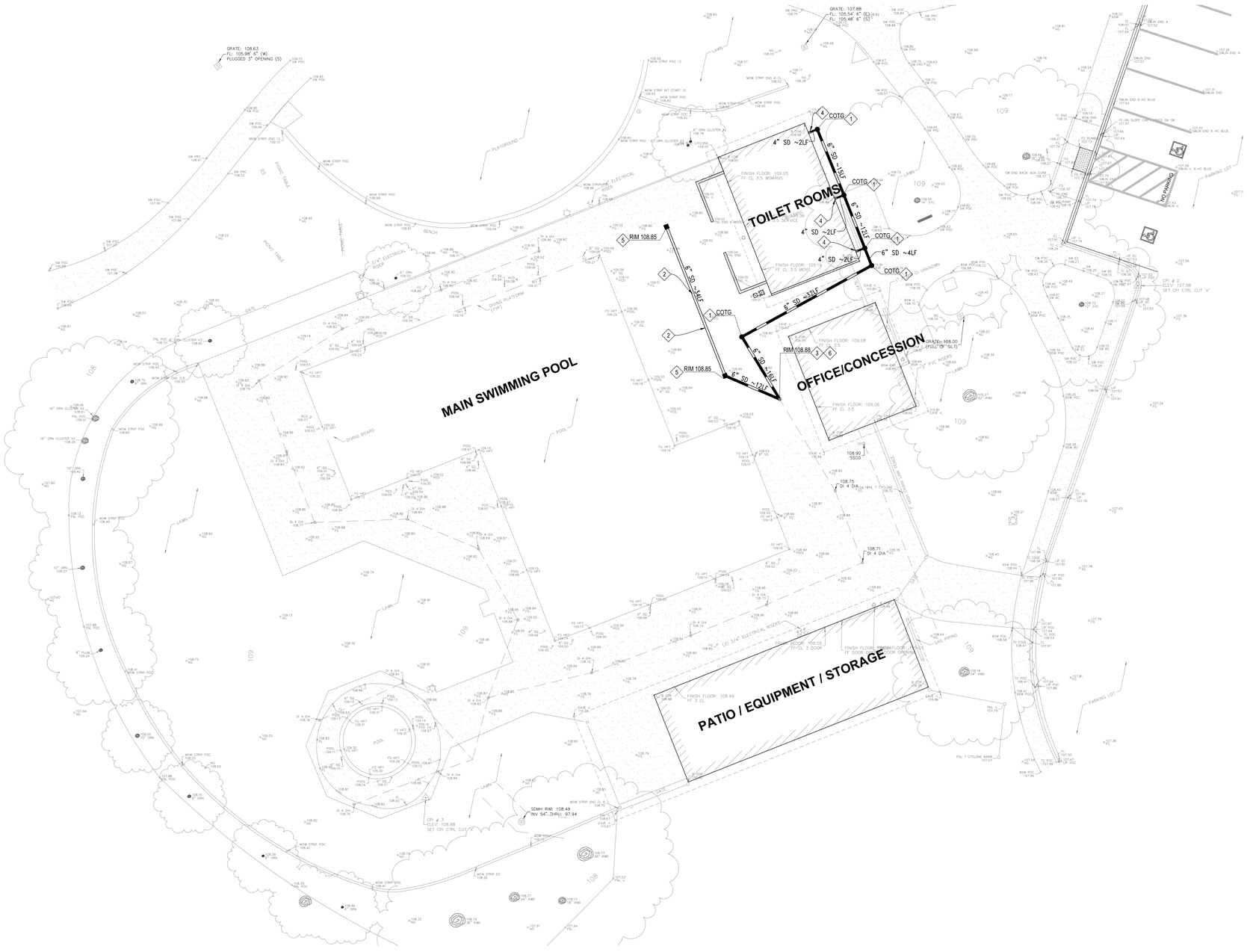

UTILITY LEGEND

- FIRE HYDRANT
- WATER VALVE
- WATER METER
- STORM DRAIN MANHOLE
- BACKFLOW PREVENTER
- CATCH BASIN
- AREA DRAIN
- CLEANOUT TO GRADE
- FIRE DEPARTMENT CONNECTION
- JUNCTION BOX

UTILITY KEYNOTES

1. CLEANOUT TO GRADE, SEE DETAIL 4/C6.0
2. INSTALL NEW SLOT DRAIN, SEE DETAIL 1/C6.0
3. CONNECT TO EXISTING STORM DRAIN SYSTEM
4. CONNECT TO DRAIN INLET, SEE DETAIL 6/C6.0
5. SLOT DRAIN CLEAN OUT, SEE DETAIL 3/C6.0
6. INSTALL NEW FLAT WORK DRAIN, SEE DETAIL 5/C6.0

UTILITY NOTES

1. CONTRACTOR SHALL VERIFY (POTHOLE IF NECESSARY) SIZE, MATERIAL, LOCATION AND DEPTH OF ALL SYSTEMS THAT ARE TO BE CONNECTED TO OR CROSSED PRIOR TO THE TRENCHING OR INSTALLATION OF PROPOSED UTILITIES, AND INFORM ENGINEER OF ANY CONFLICTS BEFORE PROCEEDING WITH WORK.
2. CONTRACTOR SHALL VERIFY ALL EXISTING UTILITIES, INVERTS AND LOCATIONS PRIOR TO BEGINNING ANY WORK ON THIS SITE.

NORTH

0 5' 10' 15' 20'

SCALE: 1" = 10'

CALL BEFORE YOU DIG
USA
800-227-2600

DISCLAIMER: TOPOGRAPHIC INFORMATION, INCLUDING PROPERTY LINES, EASEMENTS, EXISTING GRADES, EXISTING UTILITIES LOCATIONS, ETC., SHOWN ARE FOR GENERAL REFERENCE ONLY AND HAVE BEEN PROVIDED BY OTHERS AND HAVE NOT BEEN INDEPENDENTLY VERIFIED BY HOHBACH-LEWIN, INC.

PBK
BERKELEY
2600 TENTH STREET, SUITE 700
BERKELEY, CA 94710-2597
510-450-1999 P

HONEYBEE POOL RENOVATION

CITY OF ROHNERT PARK
1170 GOLF COURSE DRIVE
ROHNERT PARK, CA 94928

LICENSED ARCHITECT
LOREN GACHEN
C-37926
Exp 12/3/23
STATE OF CALIFORNIA

REGISTERED PROFESSIONAL ENGINEER
DANIEL C. TAYLOR
NO. C38406
STATE OF CALIFORNIA

CONSULTANT
HOHBACH-LEWIN, INC.
STRUCTURAL & CIVIL ENGINEERS
260 Sheridan Avenue, Suite 150
Palo Alto, CA 94306
(650) 617-5930, Fax (650) 617-5932

VANESSA GARRETT P.E. CE84141 — DATE
CITY ENGINEER

REVISION SCHEDULE

NO	DATE	BY	DESCRIPTION
1	5/25/2022		AGENCY PLAN REVIEW
2	12/02/2022		AGENCY PLAN REVIEW

DRAWN: BKB — CHECKED: BJH
DATE: 02/25/2022 — SCALE:
PROJECT NUMBER: 2010200

UTILITY PLAN

DRAWING NUMBER: C4.0

Plot Date: Dec 5, 2022 - 9:43 AM

HOHBACH-LEWIN # 15522-31

AGENCY BACKCHECK

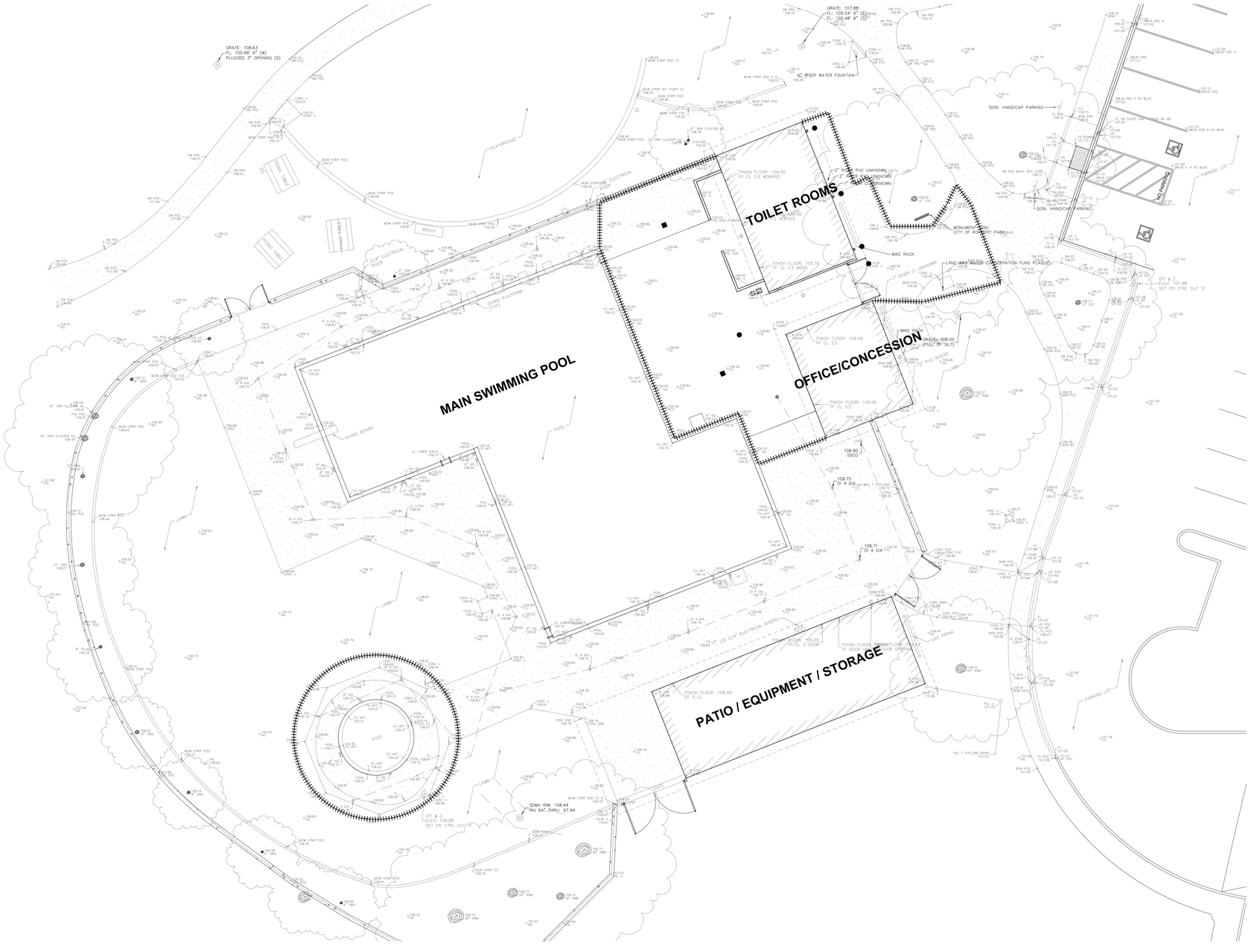

LEGEND

- CONCRETE WASHOUT (DETAIL 1/C5.1)
- CATCH BASIN PROTECTION (DETAIL 2/C5.1)
- FIBER ROLL (DETAIL 3/C5.1)
- CATCH BASIN PROTECTION ALONG GUTTERS (DETAIL 4/C5.1)
- STABILIZED CONSTRUCTION ENTRANCE (DETAIL 5/C5.1)

NORTH

0 5' 10' 15' 20'

SCALE: 1" = 10'

CALL BEFORE YOU DIG USA 800-227-2600

DISCLAIMER: TOPOGRAPHIC INFORMATION, INCLUDING PROPERTY LINES, EASEMENTS, EXISTING GRADES, EXISTING UTILITIES LOCATIONS, ETC., SHOWN ARE FOR GENERAL REFERENCE ONLY AND HAVE BEEN PROVIDED BY OTHERS AND HAVE NOT BEEN INDEPENDENTLY VERIFIED BY HOHBACH-LEWIN, INC.

PBK
BERKELEY
2600 TENTH STREET, SUITE 700
BERKELEY, CA 94710-2597
510-450-1999 P

HONEYBEE POOL RENOVATION

CITY OF ROHNERT PARK
1170 GOLF COURSE DRIVE
ROHNERT PARK, CA 94928

LICENSED ARCHITECT LOREN GACHEN C-37926 Exp. 12/31/22 STATE OF CALIFORNIA

REGISTERED PROFESSIONAL ENGINEER DANIEL G. TOMPKINS NO. C38406 CIVIL STATE OF CALIFORNIA

CONSULTANT
HOHBACH-LEWIN, INC.
STRUCTURAL & CIVIL ENGINEERS
260 Sheridan Avenue, Suite 150
Palo Alto, CA 94306
(650) 617-5930, Fax (650) 617-5932

VANESSA GARRETT P.E. CE84141 — DATE
CITY ENGINEER

REVISION SCHEDULE

NO	DATE	BY	DESCRIPTION
1	5/25/2022		AGENCY PLAN REVIEW
2	12/02/2022		AGENCY PLAN REVIEW

DRAWN: BKB	CHECKED: BJH
DATE: 02/25/2022	SCALE:
PROJECT NUMBER: 2010200	

EROSION CONTROL PLAN

DRAWING NUMBER: C5.0

Plot Date: Dec 5, 2022 - 9:43 AM

HOHBACH-LEWIN # 15552-31

AGENCY BACKCHECK

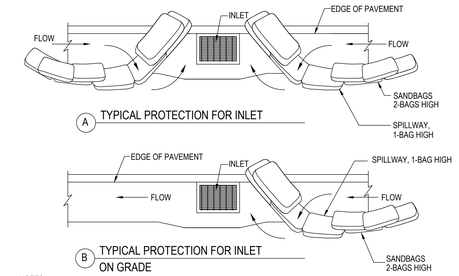

A TYPICAL PROTECTION FOR INLET

B TYPICAL PROTECTION FOR INLET ON GRADE

NOTES:

1. INTENDED FOR SHORT-TERM USE.
2. USE TO INHIBIT NON-STORM WATER FLOW.
3. ALLOW FOR PROPER MAINTENANCE AND CLEANUP.
4. BAGS MUST BE REMOVED AFTER ADJACENT OPERATION IS COMPLETED.
5. NOT APPLICABLE IN AREAS WITH HIGH SILTS AND CLAYS WITHOUT FILTER FABRIC.

4 CATCH BASIN PROTECTION ALONG GUTTERS

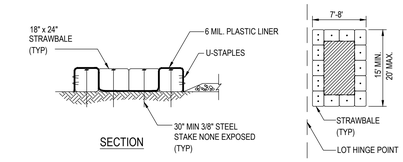

SECTION

NOTES:

1. WHEN WASHING ON-SITE, USE DESIGNATED, BERMED WASH AREAS TO PREVENT WASHWATER CONTACT WITH STORM WATER, CREEKS, RIVERS, AND OTHER WATER BODIES. THE WASH AREA CAN BE SLOPED FOR WASH WATER COLLECTION AND SUBSEQUENT INFILTRATION INTO THE GROUND.
2. LOCATE WASHOUT AREA AT LEAST 50 FEET FROM STORM DRAINS, OPEN DITCHES, OR WATER BODIES. DO NOT ALLOW RUNOFF FROM THIS AREA BY CONSTRUCTING A TEMPORARY PIT OR BERMED AREA LARGE ENOUGH FOR LIQUID AND SOLID WASTE.
3. WASH OUT WASTES INTO THE TEMPORARY PIT WHERE THE CONCRETE CAN SET, BE BROKEN UP, AND THEN DISPOSED OF PROPERLY.

1 CONCRETE WASH AREA

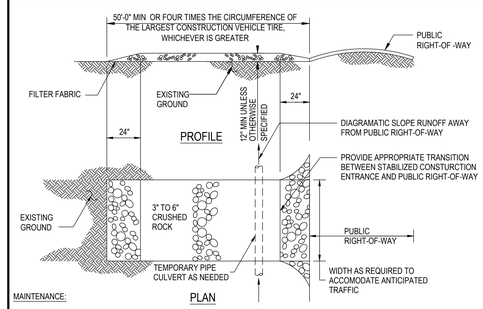

PLAN

MAINTENANCE:

1. THE ENTRANCE SHALL BE MAINTAINED IN A CONDITION THAT WILL PREVENT TRACKING OR FLOWING SEDIMENT ONTO PUBLIC RIGHTS-OF-WAY. THIS MAY REQUIRE PERIODIC TOP DRESSING WITH ADDITIONAL STONE AND REPAIR OR CLEAN OUT OF TRAPPED SEDIMENT.
2. ALL SEDIMENT SPILLED, DROPPED, WASHED, OR TRACKED ONTO THE PUBLIC RIGHT-OF-WAY SHALL BE REMOVED IMMEDIATELY.
3. WHEN NECESSARY, WHEELS SHALL BE CLEANED TO REMOVE SEDIMENT PRIOR TO ENTRANCE ONTO PUBLIC RIGHTS-OF-WAY. THIS SHALL BE DONE AT AN AREA STABILIZED WITH CRUSHED STONE, WHICH DRAINS INTO AN APRROVED SEDIMENT TRAP OR SEDIMENT BASIN.

5 STABILIZED CONTRUCTION ENTRANCE

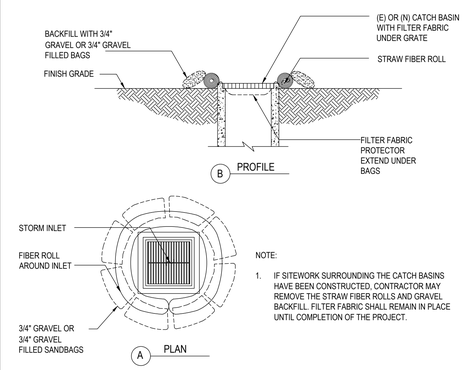

NOTE:

1. IF SITEWORK SURROUNDING THE CATCH BASINS HAVE BEEN CONSTRUCTED, CONTRACTOR MAY REMOVE THE STRAW FIBER ROLLS AND GRAVEL BACKFILL. FILTER FABRIC SHALL REMAIN IN PLACE UNTIL COMPLETION OF THE PROJECT.

2 CATCH BASIN PROTECTION (TYP.)

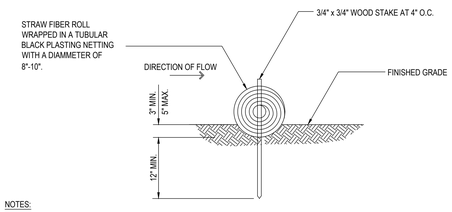

NOTES:

1. FIBER ROLL COMPOSED OF BIO-DEGRADEABLE FIBERS STUFFED INTO A PHOTO-DEGRADABLE OPEN WEAVE NETTING.
2. FIBER ROLL EROSION BARRIER TRAPS SEDIMENT AND REDUCES SHEET AND HILL SIDE EROSIONS BY REDUCING SLOPE GRADIENT. IT INCREASING INFILTRATION RATES AND BY PRODUCING A FAVORABLE ENVIRONMENT FOR PLANT ESTABLISHMENT.
3. FIBER ROLL INSTALLATION REQUIRES THE PLACEMENT AND SECURE STAKING OF THE FIBER ROLL IN A TRENCH 3"-5" DEEP, DUG ON CONTOUR , RUNOFF MUST NOT BE ALLOWED TO RUN UNDER OR AROUND FIBER ROLL.

3 FIBER ROLL

DISCLAIMER: TOPOGRAPHIC INFORMATION, INCLUDING PROPERTY LINES, EASEMENTS, EXISTING GRADES, EXISTING UTILITIES LOCATIONS, ETC., SHOWN ARE FOR GENERAL REFERENCE ONLY AND HAVE BEEN PROVIDED BY OTHERS AND HAVE NOT BEEN INDEPENDENTLY VERIFIED BY HOHBACH-LEWIN, INC.

PBK
BERKELEY
2600 TENTH STREET, SUITE 700
BERKELEY, CA 94710-2597
510-450-1999 P

HONEYBEE POOL RENOVATION

CITY OF ROHNERT PARK
1170 GOLF COURSE DRIVE
ROHNERT PARK, CA 94928

LICENSED ARCHITECT
LOREN GACHEN
C-37926
Re-Nw 12/31/22
STATE OF CALIFORNIA

REGISTERED PROFESSIONAL ENGINEER
DANIEL G. FAIRCHILD
NO. C38406
CIVIL
STATE OF CALIFORNIA

CONSULTANT
HOHBACH-LEWIN, INC.
STRUCTURAL & CIVIL ENGINEERS
260 Sheridan Avenue, Suite 150
Palo Alto, CA 94306
(650) 617-5930, Fax (650) 617-5932

VANESSA GARRETT P.E. CE84141 DATE
CITY ENGINEER

REVISION SCHEDULE

NO	DATE	BY	DESCRIPTION
1	5/25/2022		AGENCY PLAN REVIEW
2	12/02/2022		AGENCY PLAN REVIEW

DRAWN: BKB	CHECKED: BJH
DATE: 02/25/2022	SCALE:
PROJECT NUMBER: 2010200	

EROSION CONTROL DETAILS

DRAWING NUMBER: C5.1

Plot Date: Dec 5, 2022, 9:44 AM

HOHBACH-LEWIN #15922-31

AGENCY BACKCHECK

NOTES:

1. SLOPE ALL CONCRETE TO DRAIN 1% TO STREET UNLESS SHOWN OTHERWISE.
2. SEE LANDSCAPE OR ARCHITECTURAL PLANS FOR CONCRETE COLORS AND FINISHES.
3. EASE ALL EDGES R=1/2".
4. FELT SHALL BE NON-ASPHALTIC IMPREGNATED.
5. CONCRETE SECTION TO BE PER GEOTECHNICAL REPORT.

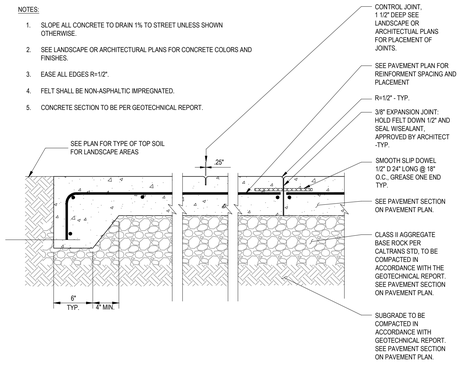

7 TYPICAL CONCRETE PAVING DETAIL

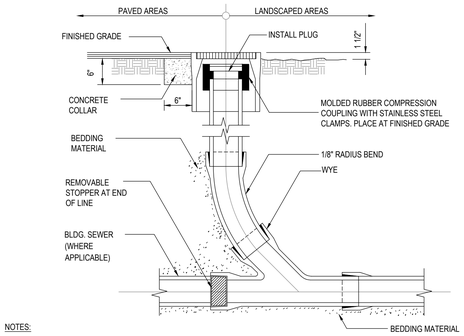

NOTES:

1. FOR PAVED AREAS, INSTALL ROUND, CAST IRON FRAME AND COVER, MARKED "SEWER" OR "STORM" AS APPLICABLE.
2. FOR LANDSCAPED AREAS, INSTALL ROUND, CONCRETE VALVE BOX WITH CAST IRON FACE AND COVER, MARKER "SEWER" OR "STORM" AS APPLICABLE.

4 CLEANOUT TO GRADE

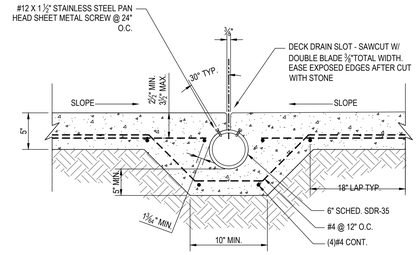

1 SLOT DRAIN SECTION

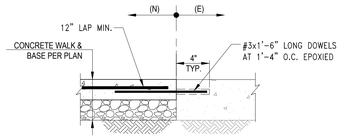

NOTES

1. SEE PLANS FOR CONCRETE OR BASE ROCK THICKNESS.
2. SEE SOILS REPORT FOR COMPACTION REQUIREMENTS.
3. ALL COMPACTION SHALL BE PERFORMED UNDER THE DIRECTION OF THE SOILS ENGINEER.
4. SEE SOILS REPORT FOR SUBGRADE REQUIREMENTS.
5. ROUGH EXISTING CONCRETE SURFACE AT JOINT.

8 NEW CONCRETE TO EXISTING CONCRETE CONNECTION

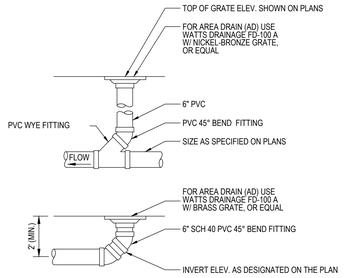

NOTES:

1. GLUED FITTINGS MAY BE SUBSTITUTED FOR GASKETED FITTING AT THE OPTION FOR THE INSTALLATION CONTRACTOR.

5 FLAT WORK DRAIN

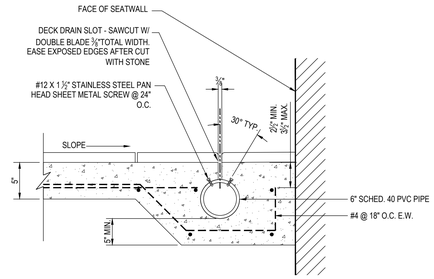

2 SLOT DRAIN @ PAVING

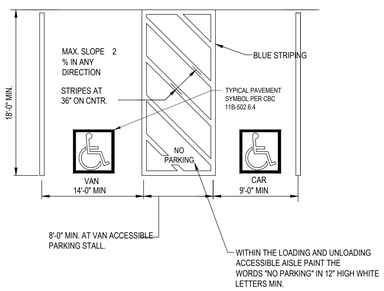

9 ACCESSIBLE PARKING DETAIL

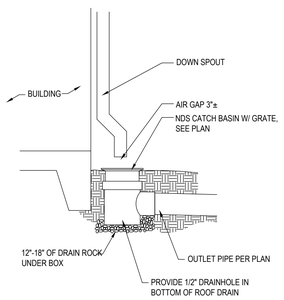

6 DOWNSPOUT TO DRAIN CONNECTION

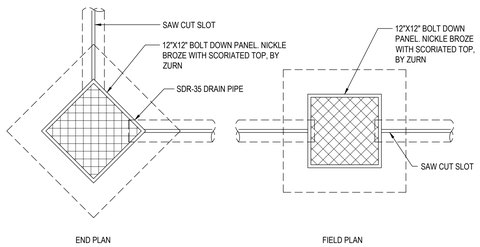

3 SLOT DRAIN CLEAN OUT

DISCLAIMER: TOPOGRAPHIC INFORMATION, INCLUDING PROPERTY LINES, EASEMENTS, EXISTING GRADES, EXISTING UTILITIES LOCATIONS, ETC., SHOWN ARE FOR GENERAL REFERENCE ONLY AND HAVE BEEN PROVIDED BY OTHERS AND HAVE NOT BEEN INDEPENDENTLY VERIFIED BY HOHBACH-LEWIN, INC.

PBK
BERKELEY
2600 TENTH STREET, SUITE 700
BERKELEY, CA 94710-2597
510-450-1999 P

HONEYBEE POOL RENOVATION

CITY OF ROHNERT PARK
1170 GOLF COURSE DRIVE
ROHNERT PARK, CA 94928

LICENSED ARCHITECT LOREN GACHEN C-37926 Date Exp. 12/31/23 STATE OF CALIFORNIA

REGISTERED PROFESSIONAL ENGINEER DANIEL G. KAMIN NO. C38406 CIVIL STATE OF CALIFORNIA

CONSULTANT
HOHBACH-LEWIN, INC.
STRUCTURAL & CIVIL ENGINEERS
260 Sheridan Avenue, Suite 150
Palo Alto, CA 94306
(650) 617-5930, Fax (650) 617-5932

VANESSA GARRETT P.E. CE84141 — DATE
CITY ENGINEER

REVISION SCHEDULE

NO	DATE	BY	DESCRIPTION
1	5/25/2022		AGENCY PLAN REVIEW
2	12/02/2022		AGENCY PLAN REVIEW

DRAWN: BKB	CHECKED: BJH
DATE: 02/25/2022	SCALE:
PROJECT NUMBER: 2010200	

DETAILS

DRAWING NUMBER: **C6.0**

Plot Date: Dec 5, 2022 - 9:44 AM

HOHBACH-LEWIN # 15502.31

AGENCY BACKCHECK

TRENCH BACKFILL AND SURFACING EXISTING ROADS

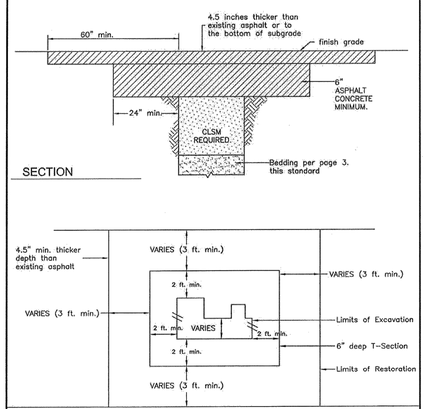

NOTES ON PAGES 5-7 THIS STANDARD

CITY OF ROHNERT PARK
STANDARD TRENCH DETAIL
TRENCH BACKFILL AND SURFACING

SCALE: NONE	DATE: OCTOBER 2010
Approved:	STD. - 215

Page 1 of 7

BORE HOLES

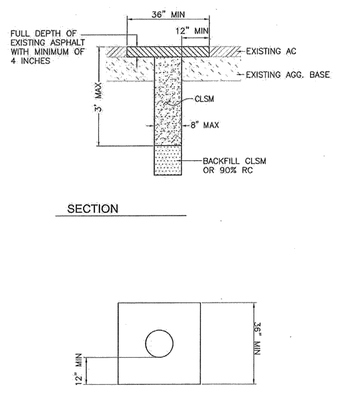

CITY OF ROHNERT PARK
STANDARD TRENCH DETAIL

SCALE: NONE	DATE: OCTOBER 2010
Approved:	STD. - 215

Page 2 of 7

TRENCH WIDTH FOR HDPE PIPE

PIPE SIZE*	TRENCH WIDTH (MIN.)
15"	36"
18"	48"
24"	54"
30"	60"
36"	72"

PIPE MUST BE CENTERED IN THE TRENCH.
*INSIDE DIAMETER

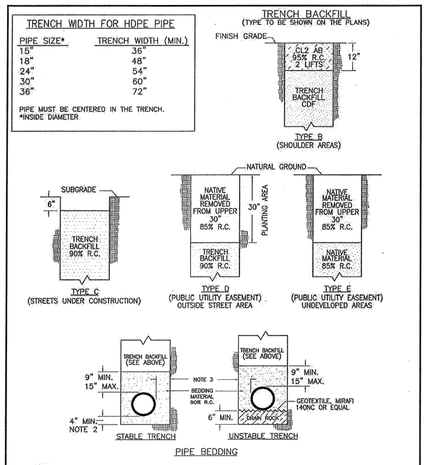

NOTES:

1. RELATIVE COMPACTION IS DESIGNATED RC.
2. 1/4 PIPE O.D. MINIMUM WHEN EXCAVATION IS IN ROCKY GROUND.
3. PIPE DIAMETER 18" OR LESS: 6" MIN., 9" MAX. PIPE DIAMETER GREATER THAN 18": 9" MIN., 12" MAX. SEE TABLE ABOVE FOR HDPE PIPE TRENCH WIDTHS.

CITY OF ROHNERT PARK
STANDARD TRENCH DETAIL

SCALE: NONE	DATE: OCTOBER 2010
Approved:	STD. - 215

Page 3 of 7

STREET STRUCTURAL SECTION SHALL BE AS SHOWN ON PLANS

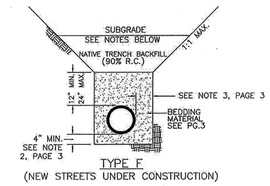

NOTES:

1. ROCKS EXCEEDING 6" SHALL NOT BE PERMITTED WITHIN THE TRENCH SECTION.
2. THE MAXIMUM DEPTH OF NATIVE BACKFILL MATERIAL SHALL NOT EXCEED 10', UNLESS THE STREET IS EXCAVATED A UNIFORM DEPTH FROM FACE OF CURB TO FACE OF CURB.
3. EMBANKMENT CONSTRUCTION METHODS SHALL BE USED. ALL SLOPES MUST BE KEYED-IN A MINIMUM OF 1' AS THE TRENCH IS BACKFILLED.
4. THE MINIMUM EQUIPMENT REQUIRED FOR COMPACTION OF NATIVE BACKFILL MATERIAL SHALL CONSIST OF A SHEEPSFOOT VIBRATORY ROLLER WITH A MINIMUM DRUM WIDTH OF 48", A MINIMUM GROSS WEIGHT OF 4600 LBS, OR MUST MEET APPROVAL OF THE CITY ENGINEER.
5. THE CONTRACTOR SHALL BE RESPONSIBLE FOR COORDINATING WITH THE PRIVATE SOILS ENGINEER AND THE CITY INSPECTOR 48 HOURS PRIOR TO EXCAVATION.
6. THE PRIVATE SOILS ENGINEER SHALL PROVIDE TESTING AND OBSERVATIONS ON A FULL TIME BASIS DURING ALL NATIVE BACKFILLING OPERATIONS. THE PRIVATE SOILS ENGINEER IS RESPONSIBLE FOR THE VERIFICATION OF ALL NATIVE BACKFILL WORK INCLUDING COMPACTION AND UNIFORM MOISTURE CONDITIONING, AND THAT MOISTURE CONTENT IS ABOVE OPTIMUM MOISTURE TO THE EXTENT APPROPRIATE FOR THE NATIVE MATERIAL BEING USED.

CITY OF ROHNERT PARK
STANDARD TRENCH DETAIL

SCALE: NONE	DATE: OCTOBER 2010
Approved:	STD. - 215

Page 4 of 7

1. In streets that are less than five (5) years old or have a Pavement Condition Index (PCI) greater than 85, the City Engineer reserves the right to deny any street excavation or require repairs that are over and above these specifications.
2. The Contractor shall at all times so conduct his/her work as to assure the least possible disruption to the motoring traffic and adjacent residents and businesses.
3. During peak traffic and during times when no work is preformed on the new installation, plates shall be in place and the street opened to full traffic flow. Plates shall be placed across the trench in a secure fashion not to move or vibrate under traffic conditions.
4. Avoid weakening or destroying the existing pavement around an excavation with heavy construction equipment, stockpiling, or delivery of materials, etc. No stockpiling of backfill or road building materials is permitted on the pavement.
5. The excavated material from the trench shall be removed from the site. Backfilling shall begin immediately after completion of the designated utility work.
6. Granular backfill shall be used around the pipe and as pipe bedding. Bedding material shall be compacted to at least 90% relative density with moisture control (not on standard Proctor). Lift thicknesses should be less than or equal to 6 inches.
7. PIPE BEDDING and TRENCH BACKFILL shall be free of asphaltic material
8. PIPE BEDDING for slopes less than or equal to 8% shall have a minimum sand equivalent value of 30 and shall conform to the following grading:

1"	3/4"	3/8"	#4	#200
100%	90-100%	65-100%	30-100%	0-15%

9. Pipe bedding for slopes greater than 8% shall have a minimum sand equivalent of 30 and shall conform to the following grading:

1"	3/4"	3/8"	#4	#30	#200
100%	90-100%	65-100%	30-100%	0-100%	0-15%

10. Trench backfill shall be compacted to at least 90% relative density with moisture control (not on standard Proctor). Lift thicknesses should be less than or equal to 12 inches. Compaction testing by an approved soils testing laboratory is required if granular trench backfill is used.
11. TRENCH BACKFILL shall conform to the following grading and have a minimum sand equivalent value of 25:

3"	#4	#30
100%	40-100%	10-100%

CITY OF ROHNERT PARK
STANDARD TRENCH DETAIL

SCALE: NONE	DATE: OCTOBER 2010
Approved:	STD. - 215

Page 5 of 7

12. CLSM (Flowable-fill) shall be used in all trenches within existing streets or shoulder areas. The depth shall be a minimum of 3 feet below the roadway aggregate base or from the pipe backfill to the roadway aggregate base, whichever is less. *Trench backfill may be used on an exception basis with the permission of the City Engineer. Compaction testing shall be provided by the contractor.
13. CLSM shall be a mixture of Portland cement, sand, 1" maximum coarse aggregate, air entraining agent, and water, batched by a ready-mixed concrete plant and delivered to the jobsite by means of transit mixing trucks. CLSM may also contain class f pozzolan (fly ash). CLSM shall be used in all roadways and be free of asphaltic material.
14. CLSM (Flowable-fill) The maximum 28-day strength is 60 psi. The following combination of material, or an equivalent, may be used to obtain the desired "flowable-fill". Cement 42 lb/CY (0.47 sack); Water 235 lb/CY(39 gallons or as needed); Coarse Aggregate1700 lb/CY; Sand (ASTM C-33)1845 lb/CY.
15. The consistency of CLSM shall be such that all trench voids are filled with minimum rodding or vibrating but not so wet as to cause excessive shrinkage.
16. Permanent pavement may be placed directly upon the CLSM as soon as it has consolidated for the surface to withstand the process of paving without displacement. The surface of the CLSM shall be firm and unyielding. Any visible movement vertically or horizontally of the CLSM under the action of construction equipment or other maximum legal axle loads shall be considered as evidence that the control density fill does not meet this requirement. The contractor shall provide trench plates to allow traffic flow for all locations until control density fill is ready to be paved.
17. Asphalt repair shall extend 5 feet minimum from either side of the trench wall. Transverse patches on arterial and collector streets shall be overlaid across the entire street width for a distance of five (5) feet minimum on all sides of the trench.
18. The replacement asphalt shall be a minimum of 4.5 inches deeper than the existing asphalt or full depth replacement of asphalt in lieu of the aggregate base and asphalt, whichever is less. *A two inch overlay of the roadway surface may be substituted for this replacement asphalt at the discretion of The City Engineer. Conforms shall meet City Standards.
19. AGGREGATE BASE shall conform to the requirements of the City Standard Specifications, Class 2 aggregate base.
20. Asphalt concrete shall conform to the requirements of Section 39 of the State Standard Specifications.
21. A thickened T section of asphalt shall be placed an additional 6 inches deep to 2 feet either side of the trench wall.
22. Pavements shall be removed by saw cutting or grinding. Neatly cut or grind pavement after trench is backfilled to subgrade.
23. Any damage, even superficial, to the existing asphalt surface in the vicinity of the work shall be repaired at the expense of the Contractor, including but not limited to gouges, scrapes, outrigger marks, backhoe bucket marks, etc. A slurry seal type covering will be considered the minimum repair. Patching may be required, at the discretion of the City Engineer.
24. Existing pavements should be removed to clean, straight lines parallel and perpendicular to the flow of traffic. Do not construct patches with angled sides and irregular shapes. All repairs shall be full lane width. Joints shall be placed at lane lines.

CITY OF ROHNERT PARK
STANDARD TRENCH DETAIL

SCALE: NONE	DATE: OCTOBER 2010
Approved:	STD. - 215

Page 6 of 7

25. Utility trench patches shall avoid excessive joints.
    a. When a proposed cut is within ten feet of an existing patch, extend the new patch to the existing patch.
    b. Patches shall be rectangular and maintain the same width throughout the length of the patch.
    c. If a patch is done within an existing patch make the boundaries of the patches coincide.
    d. Avoid frequent changes in width of patches.
    e. Do not leave strips of pavement less than one-half lane in width from the edge of the new patch to the edge of an existing patch or the lip of the gutter.
    f. The patched area must include any damage due to trenching operations within 10 feet of the patch.
26. A tack coat shall be applied to all edges of the existing asphalt before placing the new pavement. After placing the new asphalt, all seams (joints) between the new and existing pavements shall be sealed with rubberized crack seal material.
27. Patch slope and grade must match existing pavement. Patches should have a smooth longitudinal grade consistent with the existing roadway. Patches should also have a cross slope or cross section consistent with the cross slope of the existing roadway.
28. The finish pavement must be flush with the adjacent surfaces. The finished surface of the street repair shall be tested with a twelve- (12-) foot straightedge parallel to the centerline or perpendicular across joints. Variations measured from the testing face of the straightedge to the surface of the street repair shall not exceed 1/8 inch in 12 feet longitudinally and ¼ inch in 12 feet transversely.
29. The contractor is required to provide material testing for each phase of the work and at no cost to the City. The testing firm chosen to perform this work for the Contractor must be qualified and identified on the Permit application.
30. When the final surface is not immediately installed, it shall be necessary to place a temporary asphalt surface on any street cut opening. The temporary surface installation and maintenance shall be the responsibility of the Permittee until the permanent surface is completed and accepted. It shall be either a hot mix or cold mix asphalt paving material. Temporary surfaces shall be compacted, rolled smooth, and sealed to prevent degradation of the repair and existing structures during the temporary period. Permanent patching shall occur within two (2) weeks except as outlined in the Permit. Trenchplate may be used for 24 hours maximum.
31. Removal and replacement of unsatisfactory work shall be completed within fifteen (15) days of written notification of the deficiency unless deemed an emergency requiring immediate action. In the event the replacement work has not been completed, CITY ENGINEER will take action upon the contractor's bond to cover all related costs.

CITY OF ROHNERT PARK
STANDARD TRENCH DETAIL

SCALE: NONE	DATE: OCTOBER 2010
Approved:	STD. - 215

Page 7 of 7

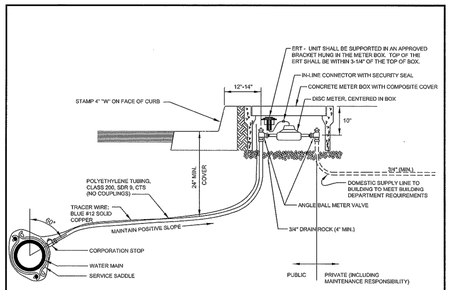

NOTES

1. THIS STANDARD APPLIES TO COMMERCIAL OR RESIDENTIAL SERVICES WHICH HAVE A SEPARATE FIRE SPRINKLER SYSTEM.
2. SET METER BOX COVER FLUSH WITH FINISHED SURFACE. THE ADDRESS MUST BE CLEARLY MARKED ON TOP OF METER BOX WITH PERMANENT MARKER BEFORE CITY WILL ACTIVATE SERVICE.
3. METER SHALL BE FURNISHED AND SET BY CONTRACTOR. PROVIDE ERT AND TRANSMITTING REGISTER WITH 5' LEAD.
4. SERVICE LATERAL AND BUILDING SUPPLY LINES SHALL BE INSTALLED UNDER BOX; KNOCKOUTS SHALL NOT BE USED. KNOCKOUTS SHALL BE GROUTED
5. WATER SERVICE TO BE LOCATED IN MIDDLE THIRD OF LOT AND OUTSIDE OF DRIVEWAY APPROACH UNLESS OTHERWISE NOTED ON PLANS.
6. SERVICE LATERAL BEDDING (PEA GRAVEL) SHALL BE PLACED PRIOR TO INSTALLATION OF POLYETHYLENE TUBING.
7. REFER TO CITY WATER STANDARDS FOR CONSTRUCTION STANDARDS, SPECIFICATIONS AND ENGINEER'S LIST OF APPROVED MATERIALS.
8. SERVICE LATERALS SHALL BE AT LEAST ONE SIZE LARGER THAN THE LARGEST METER BEING INSTALLED FOR DUAL SERVICE INSTALLATIONS.
9. ALL COMPRESSION FITTINGS SHALL HAVE STAINLESS STEEL INSERTS.
10. CONNECT SERVICE TRACER WIRE TO THE TRACER WIRE ON THE MAIN, IN ABSENCE OF TRACER WIRE ON THE MAIN WRAP TRACER WIRE AROUND MAIN.
11. NO FENCING SHALL BE INSTALLED BETWEEN STREET AND METER BOX.
12. THE METER SHALL BE INSTALLED WITH PROPER LENGTHS OF PIPE BOTH UPSTREAM AND DOWN STREAM OF THE METER SEE MANUFACTURERS SPECIFICATIONS FOR DETERMINING PIPE LENGTH(S).
13. A UTILITY BILLING ACCOUNT SHALL BE OPENED WITH CITY PRIOR TO FLOWING WATER THROUGH METER.

CITY OF ROHNERT PARK
WATER SERVICE
5/8" X 3/4", 1" & 1-1/2" DISC METERS

SCALE: NONE	DATE: OCTOBER 2010
Approved:	STD. - 863B

DISCLAIMER: TOPOGRAPHIC INFORMATION, INCLUDING PROPERTY LINES, EASEMENTS, EXISTING GRADES, EXISTING UTILITIES LOCATIONS, ETC., SHOWN ARE FOR GENERAL REFERENCE ONLY AND HAVE BEEN PROVIDED BY OTHERS AND HAVE NOT BEEN INDEPENDENTLY VERIFIED BY HOHBACH-LEWIN, INC.

PBK
BERKELEY
2600 TENTH STREET, SUITE 700
BERKELEY, CA 94710-2597
510-450-1999 P

HONEYBEE POOL RENOVATION

CITY OF ROHNERT PARK
1170 GOLF COURSE DRIVE
ROHNERT PARK, CA 94928

LICENSED ARCHITECT — LOREN GACHEN C-37926 — STATE OF CALIFORNIA — 12/31/23

REGISTERED PROFESSIONAL ENGINEER — MANUEL G. [illegible] — NO. C38406 — CIVIL — STATE OF CALIFORNIA

CONSULTANT
HOHBACH-LEWIN, INC.
STRUCTURAL & CIVIL ENGINEERS
260 Sheridan Avenue, Suite 150
Palo Alto, CA 94306
(650) 617-5930, Fax (650) 617-5932

VANESSA GARRETT P.E. CE84141 — DATE
CITY ENGINEER

REVISION SCHEDULE

NO	DATE	BY	DESCRIPTION
1	5/25/2022		AGENCY PLAN REVIEW
2	12/02/2022		AGENCY PLAN REVIEW

DRAWN: BKB	CHECKED: BJH
DATE: 02/25/2022	SCALE:
PROJECT NUMBER: 2010200	

DETAILS

DRAWING NUMBER: C6.1

Plot Date: Dec 5, 2022 - 9:44 AM

HOHBACH-LEWIN #15502.31

AGENCY BACKCHECK

SYMBOL LEGEND

WALL TYPES IN PLAN		
SYMBOLS	DESCRIPTION	REFERENCE
	NON-BEARING PARTITION	
	BEARING WALL BELOW	
	WOOD STUD WALL	
	(E) WOOD STUD WALL	

FRAMING MARKINGS		
SYMBOLS	DESCRIPTION	REFERENCE
T/SLAB +30' - 0"	ELEVATION FROM DATUM; T/INDICATES TOP OF	
CT 2 200 lbs	MECHANICAL UNIT AND MAXIMUM OPERATING WEIGHT	
	CHANGE IN ELEVATION	
UP DN	SLOPE	
A	GRID	
	WORK POINT	
	OPENING	
	SLOPE	
	WF, HSS OR PIPE COLUMN	

FOUNDATION MARKINGS		
SYMBOLS	DESCRIPTION	REFERENCE
	SPREAD FOOTING	
	(E) CONTINUOUS FOOTING	
	CONTINUOUS FOOTING	

ABBREVIATIONS

ABBREVIATION	DESCRIPTION
(E)	EXISTING
(N)	NEW
AB	ANCHOR BOLT
ADDL	ADDITIONAL
AESS	ARCHITECTURALLY EXPOSED STRUCTURAL STEEL
ALT	ALTERNATE
APPRX	APPROXIMATE
AR	ANCHOR ROD
ARCH	ARCHITECT OR ARCHITECTURAL
AVG	AVERAGE
BF	BRACED FRAME
BLDG	BUILDING
BLK	BLOCK
BLKG	BLOCKING
BM	BEAM
BOT	BOTTOM
BRDG	BRIDGING
BRG	BEARING
BTWN	BETWEEN
CIP	CAST-IN-PLACE
CJ	CONTROL/CONSTRUCTION JOINT
CJP	COMPLETE JOINT PENETRATION
CL	CENTER LINE
CLR	CLEAR OR CLEARANCE
CMU	CONCRETE MASONRY UNIT
COL	COLUMN
CONC	CONCRETE
CONN	CONNECTION(S)
CONST	CONSTRUCTION
CONT	CONTINUOUS
CTR	CENTER
CTRD	CENTERED
CTRSK	COUNTERSINK
db	DIAMETER OF BOLT OR REBAR
DBL	DOUBLE
DCW	DEMAND CRITICAL WELD
DEG	DEGREE(S)
DEMO	DEMOLISH
DET	DETAIL
DF	DOUGLAS FIR
DIA	DIAMETER
DIAG	DIAGONAL
DIM(S)	DIMENSION(S)
DL	DEAD LOAD
DWG(S)	DRAWING(S)
DWL	DOWEL(S)
EA	EACH
ECC	ECCENTRICITY
EF	EACH FACE
EJ	EXPANSION JOINT
EL	ELEVATION
ELEC	ELECTRICAL
EMBED	EMBEDMENT
EN	EDGE NAIL
ENGR	ENGINEER
EOS	EDGE OF SLAB
EQ	EQUAL
EQUIP	EQUIPMENT
ES	EACH SIDE
EW	EACH WAY
EXP	EXPANSION
EXT	EXTERIOR
FF	FINISH FLOOR
FIN	FINISH(ED)
FLR	FLOOR
FN	FIELD NAILING
FND	FOUNDATION
FO	FACE OF
FP	FIREPROOF(ING)
FRM'G	FRAMING
FS	FAR SIDE
FTG	FOOTING
GA	GAGE, GAUGE
GALV	GALVANIZED
GB	GRADE BEAM
GEN	GENERAL
GLB	GLUE-LAMINATED BEAM
GR	GRADE
GYP	GYPSUM
HD	HOLDOWN
HDR	HEADER

ABBREVIATION	DESCRIPTION
HGR	HANGER
HK	HOOK
HORIZ	HORIZONTAL
HSB	HIGH STRENGTH BOLT
HSS	HOLLOW STRUCTURAL SECTION (TUBE STEEL)
HT	HEIGHT
HVAC	HEATING VENTING AND AIR CONDITIONING
ID	INSIDE DIAMETER
IF	INSIDE FACE
INFO	INFORMATION
INT	INTERIOR
JH	JOIST HANGER
JST(S)	JOIST(S)
JT	JOINT
LBS	POUNDS
LL	LIVE LOAD
LLH	LONG LEG HORIZONTAL
LLV	LONG LEG VERTICAL
LOC	LOCATION
LONG	LONGITUDINAL
LSL	LAMINATED STRAND LUMBER
LVL	LAMINATED VENEER LUMBER
LW	LIGHTWEIGHT
LWC	LIGHTWEIGHT CONCRETE
MATL	MATERIAL
MAX	MAXIMUM
MB	UNFINISHED MACHINE BOLT
MC	MOMENT CONNECTION(S)
MECH	MECHANICAL
MEP	MECHANICAL, ELECTRICAL, PLUMBING, FIRE PROTECTION
MEZZ	MEZZANINE
MFR	MANUFACTURER
MID	MIDDLE
MIN	MINIMUM
MISC	MISCELLANEOUS
MTL	METAL
N/A	NOT APPLICABLE
NIC	NOT IN CONTRACT
NO	NUMBER
NOM	NOMINAL
NS	NEAR SIDE
NTS	NOT TO SCALE
NW	NORMAL WEIGHT
NWC	NORMALWEIGHT CONCRETE
OC	ON CENTER
OD	OUTSIDE DIAMETER
OF	OUTSIDE FACE
OH	OPPOSITE HAND
OPNG(S)	OPENING(S)
OPP	OPPOSITE
OSB	ORIENTED STRAND BOARD
P.T.	PRESSURE TREATED
PAF	POWDER ACTUATED FASTENER
PC	PILE CAP
PERP	PERPENDICULAR
PG	PLATE GIRDER
PJP	PARTIAL JOINT PENETRATION
PL	PLATE
PLY	PLYWOOD
PSF	POUNDS PER SQUARE FOOT
PSI	POUNDS PER SQUARE INCH
PSL	PARALLEL STRAND LUMBER
PT	POINT
RAD	RADIUS
REF	REFERENCE
REINF	REINFORCE(D) (ING) OR (MENT)
REQD	REQUIRED
REV	REVISION
RWD	REDWOOD
SAD	SEE ARCHITECTURAL DRAWINGS
SCD	SEE CIVIL DRAWINGS
SCHED	SCHEDULE(D)
SECT	SECTION
SEOR	STRUCTURAL ENGINEER OF RECORD
SF	SQUARE FOOT (FEET)
SHT	SHEET
SIM	SIMILAR
SLRS	SEISMIC LOAD RESISTING SYSTEM

ABBREVIATION	DESCRIPTION
SMD	SEE MECHANICAL DRAWINGS
SMRF	SPECIAL MOMENT RESISITNG FRAME
SMS	SHEET METAL SCREW(S)
SOG	SLAB ON GRADE
SP	SPACE
SPEC(S)	SPECIFICATION(S)
SQ	SQUARE
STAGG'D	STAGGERED
STD	STANDARD
STIFF	STIFFENER
STL	STEEL
STR	STRUCTURE
STRCTL	STRUCTURAL
SYMM	SYMMETRICAL
T&B	TOP AND BOTTOM
T&G	TONGUE AND GROOVE
TD	TIE DOWN
TEMP	TEMPERATURE OR TEMPORARY
THK	THICK OR THICKNESS
THRD'D	THREADED
TO	TOP OF
TRANSV	TRANSVERSE
TYP	TYPICAL
UON	UNLESS OTHERWISE NOTED
VERT	VERTICAL
VIF	VERIFY IN FIELD
W/	WITH
W/O	WITHOUT
WD	WOOD
WF	WIDE FLANGE
WP	WORK POINT
WT	WEIGHT
WWR	WELDED WIRE REINFORCEMENT

PBK
BERKELEY
2600 TENTH STREET, SUITE 700
BERKELEY, CA 94710-2597
510-450-1999 P

HONEYBEE POOL RENOVATION

CITY OF ROHNERT PARK
1170 GOLF COURSE DRIVE
ROHNERT PARK, CA 94928

CONSULTANT
BASE DESIGN
582 MARKET ST. STE. 1402
SAN FRANCISCO, CA 94104
Office:(415) 466-2997
www.BASEdesigninc.com

VANESSA GARRETT P.E. CE84141 — DATE
CITY ENGINEER

REVISION SCHEDULE			
NO	DATE	BY	DESCRIPTION
1	11/03/2022		AGENCY PLAN REVIEW
2	12/02/2022		AGENCY PLAN REVIEW

DRAWN: Author	CHECKED: Checker
DATE: 02/25/2022	SCALE: 12" = 1'-0"
PROJECT NUMBER: 2010200	

SYMBOLS AND ABBREVIATIONS

DRAWING NUMBER: S1.0

AGENCY BACKCHECK

I. GENERAL REQUIREMENTS

A. THE STRUCTURAL DRAWINGS AND PROJECT SPECIFICATIONS REPRESENT THE FINISHED STRUCTURE. THE MEANS, METHODS, PROCEDURES AND SEQUENCE OF CONSTRUCTION ARE THE RESPONSIBILITY OF THE CONTRACTOR. THE CONTRACTOR SHALL TAKE ALL NECESSARY PRECAUTIONS TO MAINTAIN AND ENSURE THE INTEGRITY OF THE STRUCTURE AT ALL STAGES OF CONSTRUCTION.

B. DURING THE CONSTRUCTION PERIOD, THE CONTRACTOR SHALL BE RESPONSIBLE FOR THE SAFETY OF PERSONNEL AND PROPERTY ON AND AROUND THE JOBSITE. THE CONTRACTOR SHALL PROVIDE SHORING, BRACING, GUYS, ETC. IN ACCORDANCE WITH ALL LOCAL, STATE, AND NATIONAL STANDARDS.

C. ALL CONSTRUCTION, TESTING, AND INSPECTIONS SHALL CONFORM TO THE BUILDING CODE REFERENCED UNDER THE HEADING "BASIS OF DESIGN" BELOW.

D. STANDARDS REFERENCED IN THESE DRAWINGS SHALL BE THE LATEST EDITION, UNLESS OTHERWISE NOTED.

E. SEE DRAWINGS OTHER THAN STRUCTURAL FOR: FLOOR FINISHES; DEPRESSIONS IN FLOOR SLABS; OPENINGS IN WALLS AND FLOORS REQUIRED BY ARCHITECTURAL AND MEP FEATURES; EXTERIOR PAVING; CURBS; SLOPES; DRAINS; PADS; NON-STRUCTURAL PARTITIONS; EMBEDDED ITEMS; ETC. COORDINATE THESE ITEMS WITH THE STRUCTURAL DRAWINGS.

F. THE CONTRACTOR SHALL VERIFY ALL DIMENSIONS AT THE JOB SITE BEFORE COMMENCING WORK AND SHALL REPORT ANY DISCREPANCIES TO THE ARCHITECT.

G. OMISSIONS OR DISCREPANCIES BETWEEN THE VARIOUS ELEMENTS OF THE CONTRACT DOCUMENTS SHALL BE BROUGHT TO THE ATTENTION OF THE ARCHITECT AND STRUCTURAL ENGINEER AND RESOLVED BEFORE PROCEEDING WITH THE WORK.

H. DO NOT SCALE THE DRAWINGS; USE WRITTEN DIMENSIONS ONLY. WHERE NO DIMENSIONS ARE PROVIDED OR WHERE DIMENSIONS PROVIDED CONFLICT WITH OTHER DRAWINGS, CONSULT THE ARCHITECT AND SEOR.

I. WHERE MEMBER LOCATIONS ARE NOT DIMENSIONED, MEMBERS SHALL BE LOCATED ON COLUMN LINES OR EQUALLY SPACED BETWEEN MEMBERS ON COLUMN LINES OR BETWEEN MEMBERS OTHERWISE LOCATED. CENTERLINES OF COLUMNS, WALLS, FRAMING MEMBERS, AND FOUNDATIONS COINCIDE WITH GRIDLINES, UNLESS OTHERWISE NOTED.

J. TYPICAL DETAILS ARE INTENDED TO APPLY TO APPLICABLE SITUATIONS, UNLESS OTHERWISE NOTED. TYPICAL DETAILS MAY NOT BE SPECIFICALLY LOCATED.

K. DETAILS SHALL BE APPLIED TO EVERY LIKE CONDITION WHETHER OR NOT THEY ARE REFERENCED IN EVERY INSTANCE. FOR CONDITIONS NOT SPECIFICALLY SHOWN, USE DETAILS SIMILAR TO THOSE PROVIDED.

L. CONTRACTOR SHALL COORDINATE SEWER AND UTILITY LINE LOCATIONS WITH THE FOUNDATION LOCATIONS AND SIZES SHOWN ON THE STRUCTURAL DRAWINGS. ANY INTERFERENCE BETWEEN SEWER/UTILITY LINES AND FOUNDATIONS SHALL BE BROUGHT TO THE ATTENTION OF THE ARCHITECT AND SEOR BEFORE PROCEEDING WITH THE WORK.

M. THE CONTRACTOR SHALL VERIFY THAT CONSTRUCTION LOADS DO NOT EXCEED THE CAPACITY OF THE STRUCTURE AT THE TIME THE LOADS ARE PLACED.

II. EXISTING CONSTRUCTION

A. WORK SHOWN IS NEW UNLESS OTHERWISE NOTED AS EXISTING, (E).

B. EXISTING CONSTRUCTION SHOWN IN THESE DRAWINGS ARE SHOWN FOR REFERENCE ONLY. THE CONTRACTOR SHALL VERIFY ALL EXISTING CONDITIONS, REVIEW ALL AVAILABLE EXISTING DRAWINGS AND VERIFY DIMENSIONS PRIOR TO CONSTRUCTION. THE CONTRACTOR SHALL NOTIFY THE ARCHITECT AND SEOR OF ALL DISCREPANCIES AND EXCEPTIONS BEFORE PROCEEDING WITH THE WORK.

C. THE REMOVAL, CUTTING, DRILLING, ETC. OF EXISTING WORK SHALL BE PERFORMED WITH GREAT CARE AND SMALL TOOLS IN ORDER TO MAINTAIN THE STRUCTURAL INTEGRITY OF THE BUILDING. IF EXISTING STRUCTURAL MEMBERS NOT INDICATED FOR REMOVAL INTERFERE WITH THE NEW WORK, THE SEOR SHALL BE NOTIFIED IMMEDIATELY. APPROVAL SHALL BE OBTAINED PRIOR TO REMOVAL OF THE EXISTING MEMBERS.

D. THE CONTRACTOR SHALL SAFELY SHORE EXISTING CONSTRUCTION WHEREVER EXISTING SUPPORTS ARE REMOVED TO ALLOW INSTALLATION OF THE NEW WORK. THE EXISTING CONSTRUCTION SHALL BE CONNECTED AND/OR EMBEDDED INTO THE NEW CONSTRUCTION AS SHOWN OR SPECIFIED.

E. ALL SHORING METHODS AND SEQUENCING OF DEMOLITION SHALL BE SPECIFIED BY A LICENSED CIVIL OR STRUCTURAL ENGINEERING IN THE STATE OF CALIFORNIA TO BE RETAINED BY THE CONTRACTOR. SEE SPECIFICATIONS FOR DETAILED REQUIREMENTS.

F. THE CONTRACTOR SHALL VERIFY THE LOCATION OF EXISTING UTILITIES BEFORE BEGINNING WORK. SPECIAL CARE SHALL BE TAKEN TO PROTECT UTILITIES THAT ARE TO REMAIN IN SERVICE DURING CONSTRUCTION.

G. THE CONTRACTOR SHALL PROMPTLY REPAIR DAMAGE CAUSED DURING OPERATIONS WITH SIMILAR MATERIALS AND WORKMANSHIP.

H. THE CONTRACTOR SHALL LOCATE EXISTING REINFORCING STEEL WHERE EXISTING CONCRETE IS TO BE CUT, CORED OR SAWN. LOCATION SHALL BE DONE USING A NON-DESTRUCTIVE METHOD. DO NOT DAMAGE EXISTING REINFORCING WITHOUT NOTIFYING THE ARCHITECT AND SEOR.

J. ALL EXISTING CONCRETE SURFACES IN CONTACT WITH NEW CONCRETE SHALL BE INTENTIONALLY ROUGHENED TO ¼" AMPLITUDE WITH EXPOSED AGGREGATE.

III. BASIS OF DESIGN

A. THE STRUCTURAL DESIGN OF THIS PROJECT IS GOVERNED BY THE 2019 CALIFORNIA BUILDING CODE (CBC).

B. RISK CATEGORY = II

C. DEAD LOADS:
1. SELF-WEIGHT OF STRUCTURE
2. ALLOWANCES:
   a. MECHANICAL EQUIPMENT = AS NOTED ON THE DRAWINGS

D. LIVE LOADS:
1. ROOF = 20 PSF

E. SNOW LOADS: N/A

F. WIND DESIGN DATA: N/A

G. SEISMIC DESIGN DATA:
1. I = 1.00
2. SDS = 1.594 g
3. SD1 = 0.866 g
4. SITE CLASS = D (DEFAULT)
5. SEISMIC DESIGN CATEGORY = E

IV. FOUNDATION

A. IT IS THE CONTRACTOR'S RESPONSIBILITY TO COMPLY WITH ALL LOCAL, STATE AND FEDERAL REGULATIONS GOVERNING EXCAVATION AND SHORING.

B. SPREAD FOOTINGS HAVE BEEN DESIGNED FOR AN ALLOWABLE BEARING PRESSURE OF 1500 PSF.

C. SCARIFY EXISTING SOIL 6" DEEP AT THE BOTTOM OF ALL EXCAVATION DAMPEN TO A UNIFORM MOISTURE CONTENT OF 2% OVER MAXIMUM. COMPACT TO 95% OF MAXIMUM DENSITY PER ASTM D1557.

D. SLABS ON GRADE SHALL BE CONSTRUCTED ON A 4" MINIMUM THICK BASE OF COMPACTED GRANULAR FILL OVER ENGINEERED FILL. COMPACTED FILL TO BE PLACED IN LIFTS NOT TO EXCEED 8" LOOSE MEASURE AND COMPACTED TO NOT LESS THAN 90% RELATIVE COMPACTION AT OPTIMUM MOISTURE CONTENT PLUS OR MINUS 2% IN ACCORDANCE WITH ASTM D1557.

E. BACKFILL BEHIND WALLS SHALL BE COMPACTED GRANULAR FILL TYP UON. DO NOT BACKFILL BEHIND WALLS UNTIL THE CONCRETE HAS ATTAINED 100% OF ITS SPECIFIELD COMPRESSIVE STRNEGTH. PLACE AND COMPACT BACKFILL BEHIND WALLS BEFORE ATTACHING FLOORS AT THE TOP OF WALL. COMPACT BACKFILL TO 90% OF MAXIMUM DENSITY PER ASTM D1557 TYP UON.

F. OVER EXCAVATE TO REMOVE ANY CRACKED OR LOOSE EXISTING MATERIAL BELOW SLAB AND FOOTING EXCAVATIONS. BACKFILL WITH LEAN CONCRETE f'c = 1500PSI @ 28 DAYS AS REQUIRED.

G. ALL FOUNDATIONS SHALL BE PLACED ON FIRM UNDISTURBED EARTH. HOLES DUE TO REMOVAL OF LARGE ROCKS OR OVER-EXCAVATION SHALL BE FILLED WITH CONCRETE. UNLESS SHOWN OTHERWISE, FOOTINGS SHALL BE PLACED A MINIMUM OF 2 FEET BELOW FINISH GRADE OF THE EXTERIOR GROUND LINE.

V. CONCRETE

A. MIXING, BATCHING, TRANSPORTING AND PLACING OF ALL CONCRETE SHALL CONFORM TO ACI 301, SPECIFICATION FOR STRUCTURAL CONCRETE FOR BUILDINGS.

B. ALL CONCRETE SHALL BE THOROUGHLY CONSOLIDATED.

C. THE SCHEDULE BELOW INDICATES THE MINIMUM CONCRETE DESIGN MIX REQUIREMENTS. SEE THE SPECIFICATIONS FOR ADDITIONAL CONCRETE PROPERTIES.

TYPE	LOCATION	MINIMUM 28-DAY STRENGTH (PSI)	MAXIMUM WEIGHT (PCF)
A	FOOTINGS & WALLS	3000	150
B	SLAB ON GRADE	3000	150

D. CONCRETE CLEAR COVER OVER MILD REINFORCING STEEL SHALL BE AS FOLLOWS, UNLESS OTHERWISE NOTED:
1. CONCRETE CAST AGAINST AND PERMANENTLY EXPOSED TO EARTH = 3"
2. CONCRETE EXPOSED TO EARTH OR WEATHER:
   a. NO. 5 BARS AND SMALLER = 1-1/2"
   b. NO. 6 BARS AND LARGER = 2"
3. CONCRETE NOT EXPOSED TO WEATHER OR IN CONTACT WITH GROUND:
   a. SLABS, WALLS, JOISTS:
4. NO. 11 BARS AND SMALLER = 3/4"
5. NO. 14 BARS AND LARGER = 1-1/2"
a. BEAMS, COLUMNS:
6. PRIMARY REINFORCEMENT, TIES, STIRRUPS, SPIRALS = 1-1/2"
   a. SHELLS, FOLDED PLATE MEMBERS:
7. NO. 5 BARS AND SMALLER = 1/2"
8. NO. 6 BARS AND LARGER = 3/4"

E. NON-SHRINK GROUT SHALL HAVE A MINIMUM COMPRESSIVE STRENGTH OF 6000 PSI AT 28 DAYS.

F. CONSTRUCTION JOINTS
1. NO HORIZONTAL CONSTRUCTION JOINTS ARE PERMITTED IN BEAMS, WALLS OR SLABS UNLESS APPROVED BY THE SEOR IN WRITING.
2. ALL CONSTRUCTION JOINTS SHALL BE CONSTRUCTED IN ACCORDANCE WITH TYPICAL CONSTRUCTION JOINT DETAILS.
3. ALL CONSTRUCTION JOINT LOCATIONS SHALL BE COORDINATED AND CONSTRUCTED IN ACCORDANCE WITH ARCHITECTURAL FINISHES AND TREATMENTS.
4. ALL SURFACES OF CONSTRUCTION JOINTS SHALL BE CLEANED TO REMOVE DUST, CHIPS OR OTHER FOREIGN MATTER PRIOR TO PLACING ADJACENT CONCRETE.

VI. REINFORCING STEEL

A. ALL REINFORCING BARS SHALL BE DEFORMED BARS CONFORMING TO THE REQUIREMENTS OF ASTM A615 AND ASTM A706 WHERE REQUIRED; ALL BARS TO BE GRADE 60 UNLESS OTHERWISE NOTED.

B. REINFORCING BARS TO BE WELDED SHALL BE ASTM A706.

C. WELDED WIRE REINFORCING SHALL BE ASTM A185.

D. WELDED BAR ANCHORS SHALL BE NELSON D2L DEFORMED BAR ANCHORS PER ICC-ES ESR-5217.

E. DETAIL REINFORCING STEEL BASED ON THE PROJECT REQUIREMENTS, ACI 318, AND ACI 315.

F. TERMINATION OF REINFORCEMENT:
1. TERMINATE ALL BARS IN LAPS, 90 DEGREE BENDS OR WITH DOWELS EPOXIED INTO EXISTING CONCRETE.
2. PROVIDE DOWELS INTO FOOTINGS BELOW AND SLABS ABOVE AT WALLS AND COLUMNS OF SAME SIZE AND SPACING AS VERTICAL REINFORCEMENT.

G. WHERE A 90 DEGREE, 135 DEGREE OR 180 DEGREE HOOK IS GRAPHICALLY INDICATED, PROVIDE CORRESPONDING ACI STANDARD HOOK PER DETAIL 3/S5.0.

H. SPLICES
1. LAP REINFORCING STEEL AS SPECIFICALLY DETAILED ON THE DRAWINGS. SEE REBAR OFFSET AND LAP SPLICE SCHEDULE IN DETAIL 10/S5.0.
2. UNLESS OTHERWISE NOTED, ALL LAP SPLICES ARE TO BE CLASS B.
3. MECHANICAL SPLICES, IF USED AT CONTRACTOR'S OPTION, SHALL BE ICC-ES APPROVED AND CAPABLE OF DEVELOPING 125% OF THE SPECIFIED MINIMUM YIELD STRENGTH OF THE BAR IN TENSION OR COMPRESSION.
4. LOCATE LAPS IN REINFORCING STEEL AS FOLLOWS:
   a. TOP HORIZONTAL REINFORCEMENT IN BEAMS AND WALLS AT SUPPORTS.
   b. BOTTOM HORIZONTAL REINFORCEMENT IN BEAMS AND WALLS AT MIDSPAN.
   c. VERTICAL REINFORCEMENT AT INSIDE FACE OF WALL AT SUPPORTS.
   d. VERTICAL REINFORCEMENT AT OUTSIDE FACE OF WALL AT MIDHEIGHT OF WALL.

VII. STRUCTURAL STEEL

A. ALL STRUCTURAL STEEL SHALL BE DETAILED, FABRICATED AND ERECTED IN ACCORDANCE WITH AISC SPECIFICATIONS.

B. ALL WELDING SHALL BE DONE IN ACCORDANCE WITH AWS D1.1 AND PERFORMED BY AWS CERTIFIED WELDERS.

C. STRUCTURAL STEEL SHALL CONFORM TO THE FOLLOWING:
1. WIDE FLANGES AND WTS = ASTM A992, GR 50
2. MISCELLANEOUS PLATES = ASTM A36
3. CONTINUITY PLATES AND PLATES FOR BUILT-UP MEMBERS = ASTM A572, GR 50
4. GUSSET PLATES = ASTM A572, GR 50
5. ANGLES AND CHANNELS = ASTM A36
6. RECTANGULAR AND SQUARE HSS MEMBERS = ASTM A500, GR B
7. ROUND HSS MEMBERS = ASTM A500, GR B
8. PIPES = ASTM A53, GR B
9. HIGH STRENGTH BOLTS = ASTM A325N, UON
10. NUTS = ASTM A563
11. WASHERS (FLAT OR BEVELLED) = ASTM F436
12. ANCHOR RODS = ASTM F1554, GR 36 UON
13. WELDED HEADED STUDS = ASTM A108, NELSON/TRW S3L OR H4L
14. STEEL DECK = ASTM A653, SS GR 33 (Fy MIN = 38 KSI)
15. WELDING ELECTRODES = E70XX, UON

D. BOLT HOLES SHALL BE NO MORE THAN 1/16" OVERSIZE, UON. WHERE OVERSIZED HOLES ARE PROVIDED AT BASE PLATES, PROVIDE PLATE WASHERS PER DETAIL 5a/S5.2.

E. ALL STEEL EXPOSED TO WEATHER SHALL BE GALVANIZED, UON.

F. FIELD MODIFICATIONS TO STRUCTURAL STEEL MEMBERS IS PROHIBITED WITHOUT PRIOR APPROVAL OF THE ARCHITECT AND SEOR.

VIII. POST-INSTALLED ANCHORS

A. POST-INSTALLED ANCHORS INCLUDE EXPANSION ANCHORS, EPOXY ANCHORS AND REINFORCING STEEL DOWELS, SCREW ANCHORS AND POWDER-ACTUATED FASTENERS.

B. DO NOT DAMAGE OR CUT EXISTING REINFORCING STEEL WHILE INSTALLING POST-INSTALLED ANCHORS. NOTIFY SEOR IF EXISTING REINFORCING STEEL INTERFERES WITH INSTALLATION OF POST-INSTALLED ANCHORS.

C. ALL MIS-DRILLED OR UNACCEPTABLE HOLES SHALL NOT BE USED AND SHALL BE GROUTED SOLID.

D. ALL POST-INSTALLED ANCHORS SHALL BE INSTALLED IN ACCORDANCE WITH APPLICABLE ICC-ES REPORT AND MANUFACTURER'S RECOMMENDATIONS.

E. PROVIDE SPECIAL INSPECTION FOR THE INSTALLATION OF ALL POST-INSTALLED ANCHORS, UNLESS OTHERWISE NOTED.

F. FIELD TEST POST-INSTALLED ANCHORS, UNLESS OTHERWISE NOTED. FIELD TESTING SHALL BE IN COMPLIANCE WITH THE FOLLOWING:
1. 10% OF POST-INSTALLED ANCHORS USED FOR SILL PLATE BOLTING SHALL BE TESTED; 100% OF ALL OTHER POST-INSTALLED ANCHORS USED FOR STRUTURAL APPLICATIONS SHALL BE TESTED.
2. 50% OF POST-INSTALLED ANCHORS USED FOR NON-STRUCTURAL APPLICATIONS SHALL BE TESTED, INCLUDING ONE HALF OF ALL ANCHORS IN EACH GROUP.
   a. IF ANY ANCHOR FAILS TESTING, ALL ANCHORS OF THE SAME TYPE THAT ARE UNTESTED SHALL BE TESTED UNTIL 20 CONSECUTIVE ANCHORS PASS.
   b. NO TESTING REQUIRED FOR POWDER-ACTUATED FASTENERS USED TO ATTACH TRACKS OF INTERIOR, NON-STRUCTURAL PARTITION WALLS WHERE THERE ARE AT LEAST THREE FASTENERS PER PIECE OF TRACK.
3. NO TESTING REQUIRED OF REINFORCING STEEL DOWELS ACROSS COLD JOINTS IN CONCRETE SLABS ON GRADE.
4. TORQUE TESTING MAY BE USED FOR TORQUE CONTROLLED POST-INSTALLED ANCHORS; TENSION TEST ALL OTHER POST-INSTALLED ANCHORS.
5. TORQUE TESTING SHALL BE IN ACCORDANCE WITH CBC SECTION 1913A.7.4.2.
6. TENSION TESTING SHALL BE IN ACCORDANCE WITH CBC SECTION 1913A.7.4.1.
7. ALL FIELD TESTING SHALL BE DONE UNDER THE OBSERVATION OF THE PROJECT INSPECTOR.
8. TESTING SHALL OCCUR AT LEAST 24 HOURS AFTER THE ANCHOR HAS BEEN INSTALLED.

G. EPOXY ANCHORS AND REINFORCING STEEL DOWELS
1. FOR INSTALLATION IN CONCRETE, EPOXY SHALL BE ONE OF THE FOLLOWING:
   a. SET-XP PER ICC-ES ESR-2508 AS MANUFACTURED BY SIMPSON STRONG TIE
   b. HIT-RE 500 V3 PER ICC-ES ESR-3814 AS MANUFACTURED BY HILTI, INC.
   c. HY-200 PER ICC-ES ESR-3187 AS MANUFACTURED BY HILTI, INC.
2. EPOXIED ANCHOR RODS SHALL BE CARBON STEEL THREADED RODS PER APPROPRIATE ICC-ES REPORT; EPOXIED REINFORCING STEEL DOWELS SHALL BE ASTM A615 GR 60 UNLESS OTHERWISE NOTED.
3. MINIMUM ANCHOR EMBEDMENT AND TENSION TEST VALUES ARE AS FOLLOWS:

EPOXY ANCHORS IN NORMAL-WEIGHT CONCRETE (f'c = 3000 PSI MIN)				
REBAR SIZE	EMBED (IN)	TENSION TEST VALUE (LBS)		
		HY-200	HIT-RE 500-V3	SET-XP
#3	3	2900	2750	1050
#4	4	5180	4940	3760
#5	5	8130	7870	5270
#6	6	11120	11120	6780
#7	7	12260	14020	8060
#8	8	16120	17120	8990
#9	9	20430	20430	N/A
#10	10	23930	23930	8780

EPOXY ANCHORS IN NORMAL-WEIGHT CONCRETE (f'c = 3000 PSI MIN)				
THREADED ROD DIAMETER (IN)	EMBED (IN)	TENSION TEST VALUE (LBS)		
		HY-200	HIT-RE 500-V3	SET-XP
3/8	3	2900	2750	1710
1/2	4	5180	4570	2610
5/8	5	8130	7140	3470
3/4	6	11120	10160	4430
7/8	7	12260	13820	5550
1	8	20430	17120	7050
1 1/4	10	23930	23930	11110

4. NO TESTING IS REQUIRED FOR #3 REINFORCING STEEL EPOXIED DOWELS AT CURBS AND HOUSEKEEPING PADS.

G. EXPANSION ANCHORS
1. FOR INSTALLATION IN CONCRETE, EXPANSION ANCHORS SHALL BE ONE OF THE FOLLOWING:
   a. STRONG BOLT 2 PER ICC-ES ESR-3037 AS MANUFACTURED BY SIMPSON STRONG TIE.
   b. KWIK BOLT TZ PER ICC-ES ESR-1917 AS MANUFACTURED BY HILTI, INC.
2. FOR INSTALLATION IN FULLY-GROUTED CONCRETE MASONRY, EXPANSION ANCHORS SHALL BE ONE OF THE FOLLOWING:
   a. WEDGE ALL PER ICC-ES ESR-1396 AS MANUFACTURED BY SIMPSON STRONG TIE.
   b. KWIK BOLT 3 PER ICC-ES ESR-1385 AS MANUFACTURED BY HILTI, INC.
3. USE STAINLESS STEEL AT EXTERIOR, WEATHER-EXPOSED OR DAMP LOCATIONS; CARBON STEEL EXPANSION ANCHORS MAY BE USED AT ALL OTHER LOCATION, UNLESS OTHERWISE NOTED.
4. MINIMUM ANCHOR EMBEDMENT AND TORQUE TEST VALUES ARE AS FOLLOWS:

KWIK BOLT TZ IN LIGHT WEIGHT CONCRETE (f'c = 3000 PSI MIN)			
ANCHOR DIAMETER	EMBED (IN)	MINIMUM HOLE	TORQUE TEST
(IN)		DEPTH (IN)	VALUE (FT-LBS)
3/8	2 5/16	2 5/8	25
1/2	2 3/8	2 5/8	40
5/8	3 9/16	3 7/8	60

STRONG BOLT 2 IN LIGHT WEIGHT CONCRETE (f'c = 3000 PSI MIN)			
ANCHOR DIAMETER	EMBED (IN)	MINIMUM HOLE	TORQUE TEST
(IN)		DEPTH (IN)	VALUE (FT-LBS)
3/8	1 7/8	2	30
1/2	2 3/4	3	60
5/8	3 3/8	3 5/8	90
3/4	4 1/8	4 3/8	150

5. WHERE EXPANSION ANCHORS ARE INSTALLED IN CONTACT WITH WOOD FRAMING, PROVIDE AN OVERSIZE WASHER IN ORDER TO ACHIEVE TORQUE REQUIRED BY ICC-ES REPORT. USE 1/4"x3"x3" WASHER, MINIMUM.
6. CONTRACTOR SHALL PROVIDE ANCHORS WITH SUFFICIENT TOTAL LENGTH FOR THE SPECIFIED EMBEDMENT LENGTH, THICKNESS OF FASTENED PART, WASHER AND NUT.

H. SCREW ANCHORS
1. FOR INSTALLATION IN CONCRETE, SCREW ANCHORS SHALL BE ONE OF THE FOLLOWING:
   a. TITEN HD PER ICC-ES ESR-2713 AS MANUFACTURED BY SIMPSON STRONG TIE.
   b. KWIK HUS-EZ PER ICC-ES ESR-3027 AS MANUFACTURED BY HILTI, INC.
2. MINIMUM ANCHOR EMBEDMENT AND TENSION TEST VALUES ARE AS FOLLOWS:

TITEN HD IN NORMAL WEIGHT CONCRETE (f'c = 3000 PSI MIN)			
ANCHOR DIAMETER	EMBED (IN)	MINIMUM HOLE	TENSION TEST
(IN)		DEPTH (IN)	VALUE (FT-LBS)
3/8	2 1/2	3	1200
1/2	3 1/4	3 3/4	2973
5/8	4	4 1/2	3935
3/4	5 1/2	6	5895

KWIK HUS-EZ IN NORMAL WEIGHT CONCRETE (f'c = 3000 PSI MIN)			
ANCHOR DIAMETER	EMBED (IN)	MINIMUM HOLE	TENSION TEST
(IN)		DEPTH (IN)	VALUE (FT-LBS)
1/4	2 1/2	2 7/8	1133
3/8	2 1/2	2 3/4	2093
1/2	2 1/4	2 5/8	1547
5/8	3 1/4	3 5/8	3049
3/4	4	4 3/8	4118

I. POWDER-ACTUATED FASTENERS
1. PAF SHALL BE ONE OF THE FOLLOWING:
   a. SIMPSON STRONG TIE POWDER-ACTUATED FASTENERS PER ICC-ES ESR-2138 FOR ANCHORAGE OF METAL TO CONCRETE, MASONRY OR STEEL.
   b. HILTI, INC. X-U PER ICC-ES ESR-2269 FOR ANCHORAGE OF METAL TO CONCRETE, MASONRY OR STEEL
   c. HILTI, INC. X-CP 72 PER ICC-ES ESR-2379 FOR ANCHORAGE OF SILL PLATES TO CONCRETE
2. PROVIDE 0.08"x1.1"x1.1" SQUARE OR 0.08"x1.425" DIAMETER ROUND WASHER AT EACH PAF.
3. MINIMUM PAF EMBED INTO CONCRETE SHALL BE 1", UNLESS OTHERWISE NOTED.
4. MINIMUM PAF EMBED INTO STEEL SHALL BE PER MANUFACTURER.

IX. SUBMITTALS AND DEFERRED APPROVALS

A. THE CONTRACTOR SHALL REVIEW EACH SUBMITTAL PRIOR TO SENDING TO THE ARCHITECT AND SEOR. SUBMITTALS WILL ONLY BE REVIEWED IF THEY ARE BASED ON THE LATEST DESIGN, IF THEY ADDRESS ANY COMMENTS FROM PREVIOUS VERSIONS OF THE SUBMITTAL, IF THE WORK IS COORDINATED WITH ALL OTHER TRADES, AND IF THE SUBMITTAL DOES NOT INCLUDE SUBSTITUTION REQUESTS. SUBMITTALS NOT MEETING THESE REQUIREMENTS WILL BE RETURNED TO THE CONTRACTOR WITHOUT COMMENT.

B. THE SEOR'S REVIEW OF EACH SUBMITTAL SHALL BE FOR GENERAL CONFORMANCE WITH THE DESIGN INTENT.

C. NO WORK SHALL PROCEED PRIOR TO THE SEOR'S AND ARCHITECT'S APPROVAL OF THE SUBMITTAL.

D. THE FOLLOWING ITEMS REQUIRE A SUBMITTAL FOR STRUCTURAL REVIEW. SEE THE SPECIFICATIONS FOR ADDITIONAL INFORMATION.
1. CONCRETE MIX DESIGN
2. STRUCTURAL STEEL
3. REINFORCING STEEL SHOP DRAWINGS

X. TESTING AND INSPECTION

A. SPECIAL INSPECTIONS SHALL BE PERFORMED BY A SPECIAL INSPECTOR PER CBC SECTIONS 1704 AND 1705. THE SPECIAL INSPECTOR SHALL BE RETAINED BY THE OWNER AND NOT BY THE CONTRACTOR.

B. THE FOLLOWING ITEMS SHALL RECEIVE SPECIAL INSPECTION BY A CERTIFIED SPECIAL INSPECTOR AS DESCRIBED ABOVE PER CITY OF ROHNERT PARK SPECIAL INSPECTION AND OBSERVATION FORM.
1. WELDING
2. POST INSTALLED ANCHORS
3. STRUCTURAL STEEL

PBK
BERKELEY
2600 TENTH STREET, SUITE 700
BERKELEY, CA 94710-2597
510-450-1999 P

HONEYBEE POOL RENOVATION

CITY OF ROHNERT PARK
1170 GOLF COURSE DRIVE
ROHNERT PARK, CA 94928

LOREN GACHEN C-37926 EXP. 12/31/22 STATE OF CALIFORNIA

REGISTERED PROFESSIONAL ENGINEER GOKHAN AKALAN NO. 5594 STRUCTURAL STATE OF CALIFORNIA

CONSULTANT
BASE DESIGN
582 MARKET ST. STE. 1402
SAN FRANCISCO, CA 94104
Office:(415) 466-2997
www.BASEdesigninc.com

VANESSA GARRETT P.E. CE84141 — DATE
CITY ENGINEER

REVISION SCHEDULE

NO	DATE	BY	DESCRIPTION
1	11/03/2022		AGENCY PLAN REVIEW
2	12/02/2022		AGENCY PLAN REVIEW

DRAWN: Author — CHECKED: Checker
DATE: 02/25/2022 — SCALE: 1 1/2" = 1'-0"
PROJECT NUMBER: 2010200

GENERAL NOTES

DRAWING NUMBER: S1.1

AGENCY BACKCHECK

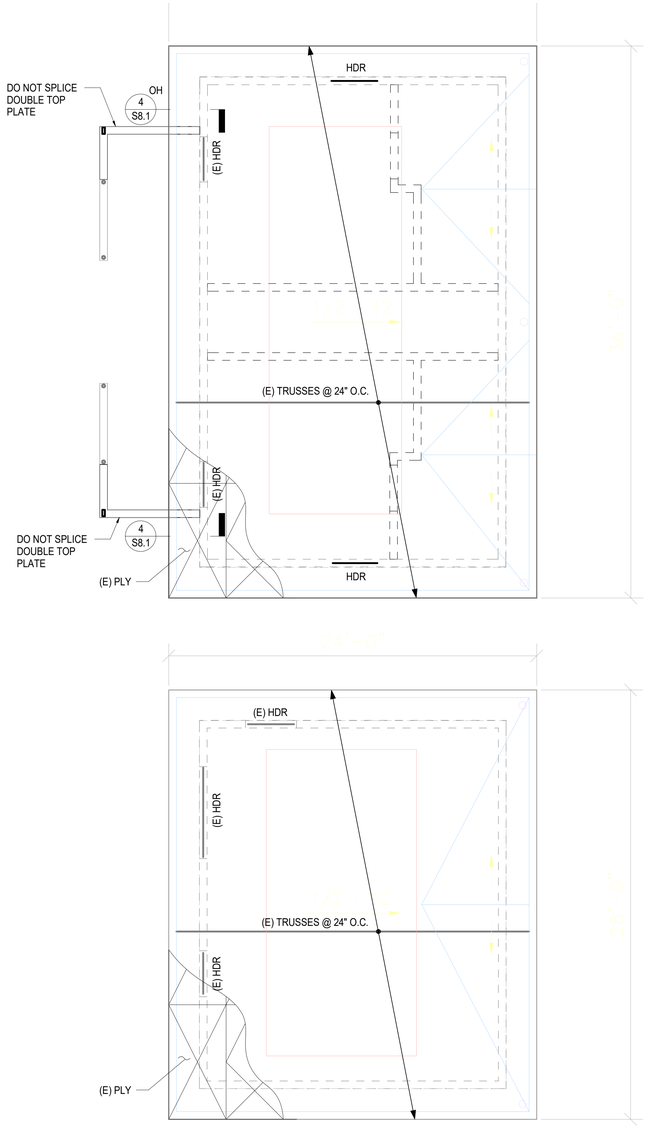

2 ROOF FRAMING PLAN

1/4" = 1'-0"

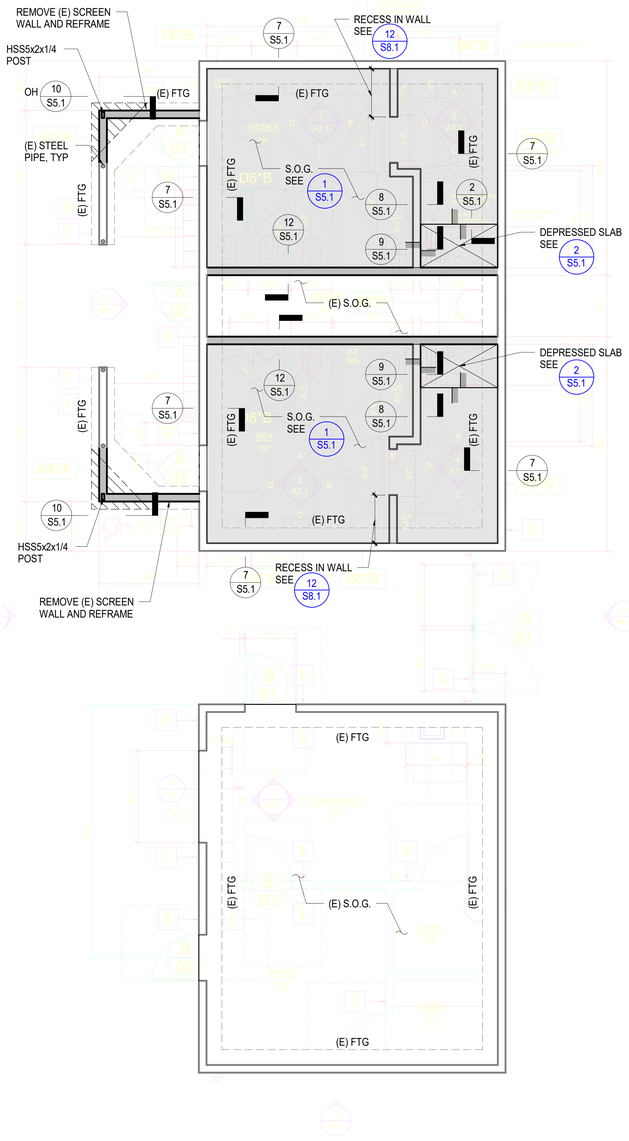

1 FOUNDATION PLAN

1/4" = 1'-0"

SHEET NOTES

1. SEE GENERAL NOTES ON SHEET S 1.0, S1.1.
2. FOR DIMENSION AND ELEVATIONS SEE ARCHITECTURAL DRAWINGS.
3. STRUCTURAL STUD WALLS SUPPORTING THE ROOF ARE SHOWN THUS ==== ON PLAN AND SHALL BE 2X6 STUDS @ 16" O.C. UON. SEE ARCHITECTURAL DRAWINGS FOR NON-LOAD BEARING PARTITIONS. SEE DETAILS ON SHEET
4. FOR ROOF DRAINS, OPENINGS, FACIA DETAILS, ETC., SEE DRAWINGS OTHER THAN STRUCTURAL.
5. FOR LOCATIONS OF EQUIPMENT AND SHAFT OPENINGS S.A.D. AND S.M.D. CONTRACTOR SHALL COORDINATE LOCATIONS OF EQUIPMENT SUPPORT BEAMS WITH EQUIPMENT REQUIREMENTS.
6. WHERE METAL FRAMING CONNECTORS ARE REQUIRED, "SIMPSON" CONNECTORS ARE DENOTED.
7. SEE TYPICAL CONCRETE DETAILS ON SHEET S5.0, S5.1.
8. SEE GENERAL NOTES ON S1.1 FOR FOOTING DESIGN CRITERIA.
9. EXCAVATIONS SHALL BE MADE AS NEAR AS POSSIBLE TO THE NEAT LINES REQUIRED BY THE SIZE AND SHAPE OF THE STRUCTURE. NO MATERIAL IS TO BE EXCAVATED UNNECESSARILY.
10. ALL FOUNDATION EXCAVATIONS MUST BE REVIEWED AND APPROVED BY THE INSPECTOR PRIOR TO PLACEMENT OF CONCRETE. PROVIDE WRITTEN OBSERVATION REPORT TO CITY OF BERKELEY BUILDING DIVISION AND THE SEOR AS REQ'D.
11. VERIFY LOCATION OF UNDERGROUND UTILITIES BEFORE EXCAVATION. NOTIFY ARCHITECT PRIOR TO EXCAVATION IN THE EVENT SUCH UTILITIES ARE ENCOUNTERED.
12. FOR DRAINAGE DETAILS, SUMPS, PITS, DAMP PROOFING, TRENCHES, CURBS, EXTERIOR WALKS, UTILITIES, EQUIPMENT DETAILS, STEPS, ETC., SEE DRAWINGS OTHER THAN STRUCTURAL.
13. STRUCTURAL STUD WALLS ARE SHOWN THUS: ON PLAN AND SHALL BE 2X6 STUDS AT 16" ON CENTER U.O.N. SEE ARCH.DWGS. FOR NONLOAD BEARING PARTITION WALLS. FOR TYPICAL FRAMING OF STRUCTURAL STUD WALLS SEE DETAILS ON SHEET S8.0.
14. ⊡ DENOTES POST U.O.N
15. ALL WORK SHOWN IS NEW UNLESS NOTED AS EXISTING (E).
16. SHORE (E) FRAMING ABOVE AS REQUIRED.
17. ALL LUMBER EXPOSED TO WEATHER SHALL BE PRESSURE TREATED.

PBK
BERKELEY
2600 TENTH STREET, SUITE 700
BERKELEY, CA 94710-2597
510-450-1999 P

HONEYBEE POOL RENOVATION

CITY OF ROHNERT PARK
1170 GOLF COURSE DRIVE
ROHNERT PARK, CA 94928

REGISTERED PROFESSIONAL ENGINEER GOKHAN AKALAN NO. 5594 STRUCTURAL STATE OF CALIFORNIA

LICENSED ARCHITECT C-37926 STATE OF CALIFORNIA

CONSULTANT
BASE DESIGN
582 MARKET ST. STE. 1402
SAN FRANCISCO, CA 94104
Office:(415) 466-2997
www.BASEdesigninc.com

VANESSA GARRETT P.E. CE84141 DATE
CITY ENGINEER

REVISION SCHEDULE

NO	DATE	BY	DESCRIPTION
1	11/03/2022		AGENCY PLAN REVIEW
2	12/02/2022		AGENCY PLAN REVIEW

DRAWN: Author	CHECKED: Checker
DATE: 02/25/2022	SCALE: As indicated
PROJECT NUMBER: 2010200	

FOUNDATION AND ROOF FRAMING PLANS

DRAWING NUMBER: S2.0

AGENCY BACKCHECK

CONCRETE STRENGTH		3000 PSI				4000 PSI			
REINFORCING CONFIGURATION		CASE 1		CASE 2		CASE 1		CASE 2	
BAR SIZE \ BAR LOCATION		TOP	OTHER	TOP	OTHER	TOP	OTHER	TOP	OTHER
"CLASS A LAP SPLICE AND STRAIGHT DEVELOPMENT LENGTH Ld (INCHES)"	#3	22	17	32	25	19	15	28	22
	#4	29	22	43	33	25	19	37	29
	#5	36	28	54	41	31	24	47	36
	#6	43	33	64	50	37	29	56	43
	#7	63	48	94	72	54	42	81	63
	#8	72	55	107	82	62	48	93	71
	#9	81	62	121	93	70	54	105	81
	#10	91	70	136	105	79	61	118	91
	#11	101	78	151	116	87	67	131	101
	#14	N/A	N/A	N/A	N/A	N/A	N/A	N/A	N/A
CLASS B LAP SPLICE (INCHES)	#3	28	22	42	32	24	19	36	28
	#4	37	29	56	43	32	25	48	37
	#5	47	36	70	54	40	31	60	47
	#6	56	43	84	64	48	37	72	56
	#7	81	63	122	94	70	54	106	81
	#8	93	72	139	107	80	62	121	93
	#9	105	81	157	121	91	70	136	105
	#10	118	91	177	136	102	79	153	118
	#11	131	101	195	151	113	87	170	131
	#14	N/A	N/A	N/A	N/A	N/A	N/A	N/A	N/A

NOTES:
1. VALUES IN THE TABLE ARE FOR NON-EPOXY COATED GRADE 60 REINFORCING STEEL AND NORMAL WEIGHT CONCRETE.
2. CASES 1 AND 2 ARE DEPENDENT ON THE TYPE OF CONCRETE ELEMENT, CONCRETE COVER AND CENTER-TO-CENTER SPACING OD REINFORCING BARS. THEY ARE DEFINED AS:
   CASE 1:
   BEAM AND COLUMNS:
   - CONCRETE COVER >= db
   - CENTER-TO-CENTER SPACING >= 2x db, AND
   - STIRRUPS OR TIES PROVIDED THROUGHTOUT ld
   OTHER ELEMENTS:
   - CONCRETE COVER >= db AND
   - CENTER-TO-CENTER SPACING >= 3x db
   CASE 2:
   BEAM AND COLUMNS:
   - CONCRETE COVER < db
   - CENTER-TO-CENTER SPACING < 2x db
   OTHER ELEMENTS:
   - CONCRETE COVER < db AND
   - CENTER-TO-CENTER SPACING < 2x db
3. TOP BARS ARE HORIZONTAL BARS WITH MORE THAN 12" OF FRESH CONCRETE BELOW. OTHER BAR INCLUDE ALL VERTICAL REINFORCING, ALL HORIZONTAL WALL REINFORCING AND HORIZONTAL REINFORCING WITH LESS THAN 12" OF FRESH CONCRETE BELOW BAR.
4. PROVIDE CLASS B LAP SPLICES, U.O.N.
5. WHERE ld IS NOT OBTAINABLE DUE TO SPACE RETRICTIONS, PROVIDE A STANDARD HOOK PER DETAIL 2/-
6. SPLICES OF HORIZONTAL REINFORCING BARS IN WALLS AND SLABS SHALL BE STAGGERED. SPLICES OF HORIZONTAL REINFORCING BARS IN WALLS AND SLABS CONTAINING TWO CURTAINS OF REINFORCEMENT SHALL NOT OCCUR IN THE SAME LOCATION; SPLICES SHALL BE OFFSET BY THE MAXIMUM OF 12 INCHES AND 12 BAR DIAMETERS.
7. MECHANICAL COUPLERS MAY BE USED IN LIEU OF LAP SPLICES. MECHANICAL COUPLERS SHALL BE PER IAPMO UES ER-0129 AND RESIST 125% OF REINFORCING BAR YIELD STRENGTH.
8. WHERE BARS OF DIFFERENT SIZES ARE SPLICED, SPLICE LENGTH SHALL BE THE MAXIMUM OF ld OF THE LARGER BAR AND THE LAP SPLICE LENGTH OF THE SMALLER BAR.
9. LAP TOP BARS AT MIDSPAN AND BOTTOM BARS AT SUPPORT, U.O.N.
10. NON-CONTACT LAP SPLICED BARS SHALL BE SPLACED AT LEAST 1 ½" AND NO MORE THAN THE MAXIMUM OF ONE- FIFTH OF THE LAP SPLICE AND 6".

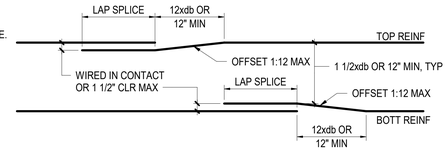

a BEAM SPLICE DETAIL

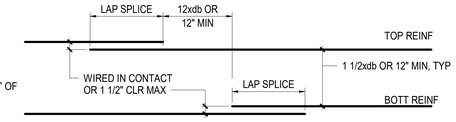

b STRAGGERED WALL OR SLAB SPLICE DETAIL

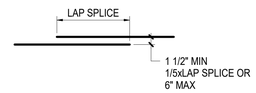

c NON-CONTACT LAP SPLICE

10 LAP SPLICE + STRAIGHT BAR DEVELOPMENT LENGTHS

NTS

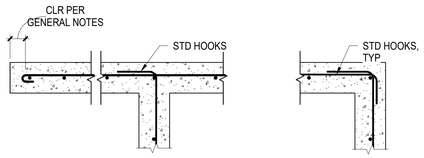

11 CURB INTERSECTIONS

NTS

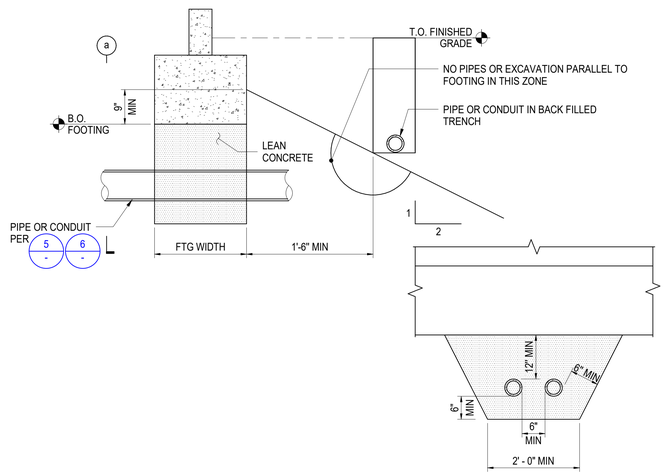

8 TYPICAL EXCAVATION PARALLEL TO FOOTING

NTS

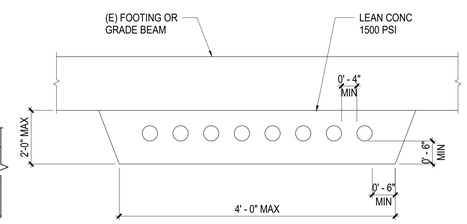

NOTES:
1. NOT TO BE LOCATED WITHIN 3'-0" OF COLUMN OR LOAD BEARING POST.
2. COORDINATE WITH ELECTRICAL WORK.

5 TYPICAL CONDUIT OR PIPE UNDER FOOTING OR GRADE BEAM (ELEVATION)

NTS

HOOKED BAR DEVELOPMENT LENGTH, Ldh		
BAR SIZE	CONCRETE STRENGTH	
	3000 PSI	4000 PSI
#3	0' - 8"	0' - 7"
#4	0' - 11"	0' - 9"
#5	1' - 2"	1' - 0"
#6	1' - 4"	1' - 2"
#7	1' - 7"	1' - 5"
#8	1' - 10"	1' - 7"
#9	2' - 1"	1' - 9"
#10	2' - 3"	2' - 0"
#11	2' - 6"	2' - 2"

NOTES:
1. THE HOOKED BAR DEVELOPMENT LENGTHS IN THIS TABLE ARE FOR NORMALWEIGHT CONCRETE. FOR LIGHTWEIGHT CONCRETE, THE HOOKED BAR DEVELOPMENT LENGTH SHALL NOT BE LESS THEN 10xdb, 7 ½" AND 1.3xLdh PER THE TABLE ABOVE.
2. THE HOOKED BAR DEVELOPMENT LENGTHS IN THIS TABLE APPLY TO MEMBERS WITH:
   a. SIDE COVER EQUAL TO AT LEAST 2 ½".
   b. END COVER EQUAL TO AT LEAST 2".

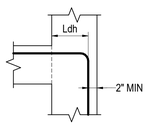

2 HOOKED BAR DEVELOPMENT LENGTHS

NTS

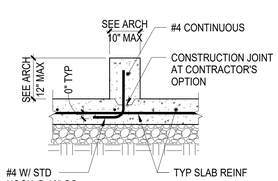

a CURB AT SLAB-ON-GRADE

9 CONCRETE CURB DETAIL

NTS

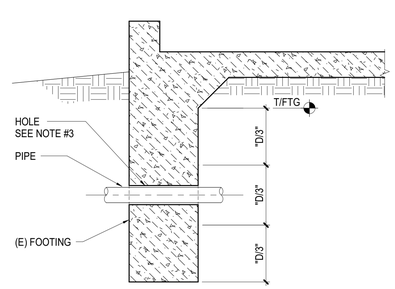

NOTES:
1. PRIOR TO DRILLING FOR HOLE, LOCATE (E) REINFORCING. DO NOT CUT (E) REINFORCING AND MAINTAIN 1 1/2" CLR AROUND HOLE.
2. MAXIMUM PIPE SIZE 6" DIA UNLESS OTHERWISE NOTED.
3. PROVIDE 1" MINIMUM GAP BETWEEN PIPE AND HOLE ALL AROUND PIPE.
4. LOCATE PIPE WITHIN MIDDLE 1/3 OF (E) FOOTING DEPTH.
5. MINIMUM CLEAR DISTANCE BETWEEN SLEEVES SHALL BE 4x LARGEST SLEEVE DIAMETER.
6. CAULK SEAL GAP AT SLEEVE-TO-PIPE/CONDUIT INTERFACE ON EXTERIOR SIDE OF FOOTING.

6 PIPE PENETRATION THRU (E) FOOTING

1" = 1'-0"

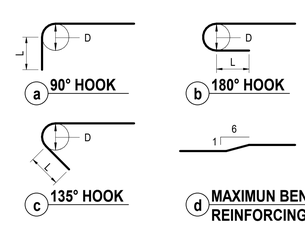

a 90° HOOK
b 180° HOOK
c 135° HOOK
d MAXIMUN BEND IN MAIN REINFORCING

MAIN REINFORCING HOOKS			
BAR SIZE	BEND DIAMETER, D (IN)	90° HOOK L (IN)	180° HOOK L (IN)
#3	2 1/4	4 1/2	2 1/2
#4	3	6	2 1/2
#5	3 3/4	7 1/2	2 1/2
#6	4 1/2	9	3

STIRRUP + TIE REINFORCING HOOKS			
BAR SIZE	BEND DIAMETER, D (IN)	90° HOOK L (IN)	180° HOOK L (IN)
#3	1 1/2	3	3
#4	2	3	3
#5	2 1/2	3 3/4	3 3/4

3 TYPICAL BAR HOOKS

NTS

PBK
BERKELEY
2600 TENTH STREET, SUITE 700
BERKELEY, CA 94710-2597
510-450-1999 P

HONEYBEE POOL RENOVATION

CITY OF ROHNERT PARK
1170 GOLF COURSE DRIVE
ROHNERT PARK, CA 94928

CONSULTANT
BASE DESIGN
582 MARKET ST. STE. 1402
SAN FRANCISCO, CA 94104
Office:(415) 466-2997
www.BASEdesigninc.com

VANESSA GARRETT P.E. CE84141 — DATE
CITY ENGINEER

REVISION SCHEDULE

NO	DATE	BY	DESCRIPTION
1	11/03/2022		AGENCY PLAN REVIEW
2	12/02/2022		AGENCY PLAN REVIEW

DRAWN: Author — CHECKED: Checker
DATE: 02/25/2022 — SCALE: As indicated
PROJECT NUMBER: 2010200

TYPICAL CONCRETE DETAILS

DRAWING NUMBER: S5.0

AGENCY BACKCHECK

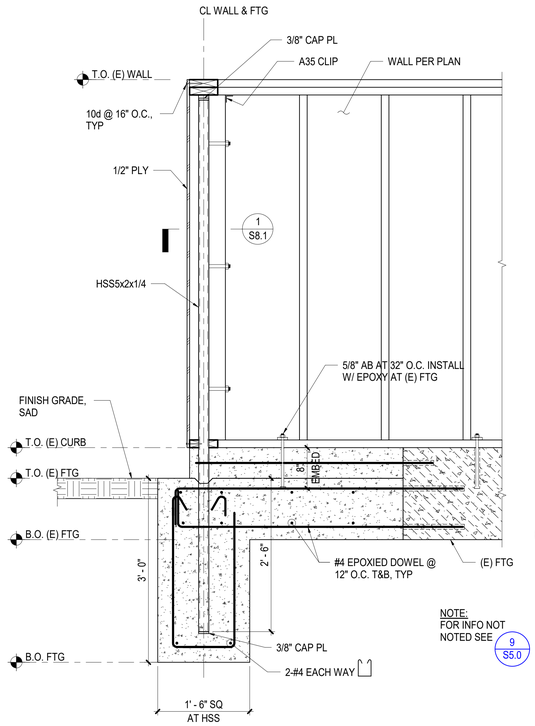

10 SECTION AT NEW FOOTING AND PIPE

1" = 1'-0"

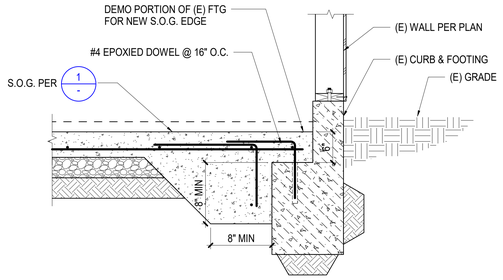

7 SECTION AT (E) FOOTING

1" = 1'-0"

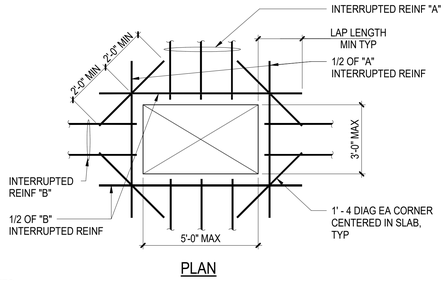

PLAN

NOTES:
1. OPENING SIZE, LOCATION, AND REINFORCING SHALL BE SUBMITTED AS PART OF THE REINFORCING SHOP DRAWING SUBMITTAL FOR REVIEW AND APPROVAL.
2. AT EACH SIDE OF THE OPENING, ADD NOT LESS THAN ONE-HALF THE AREA OF REINFORCING THAT IS INTERRUPTED BY THE OPENING. WHERE THE BAR LENGTH PAST THE OPENING IS INTERRUPTED BY AN EDGE OF SLAB, PROVIDE A STANDARD HOOK AT THE DISCONTINUOUS END.
3. WHERE THE DIAGONAL LENGTH IS INTERRUPTED BY AN EDGE OF SLAB, PROVIDE A STANDARD HOOK.
4. NOT REQUIRED AT COLUMN LOCATIONS.

4 OPENING IN SLAB-ON-GRADE

NTS

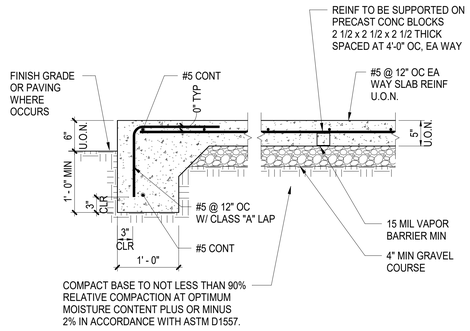

1 SLAB-ON-GRADE DETAIL

NTS

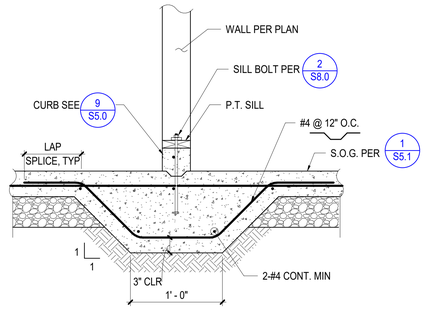

8 THICKENED SLAB AT NON-BEARING WALL

1" = 1'-0"

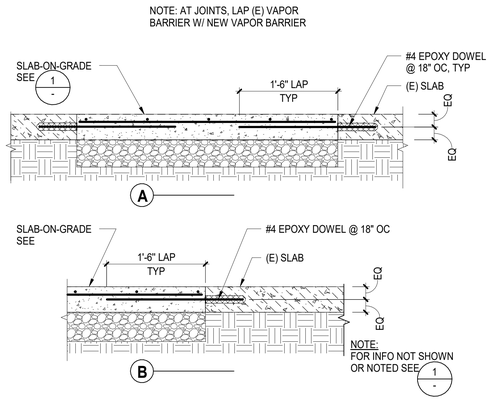

5 SLAB-ON-GRADE AT (E) SLAB

NTS

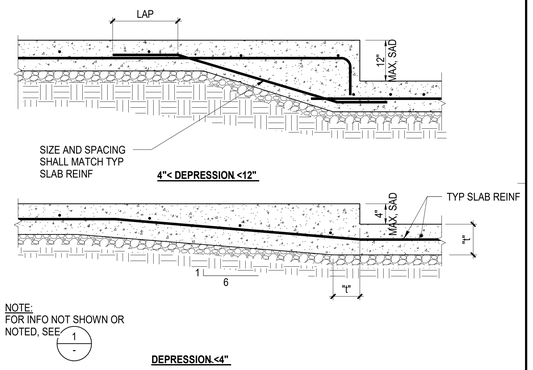

2 SLAB-ON-GRADE DEPRESSION

NTS

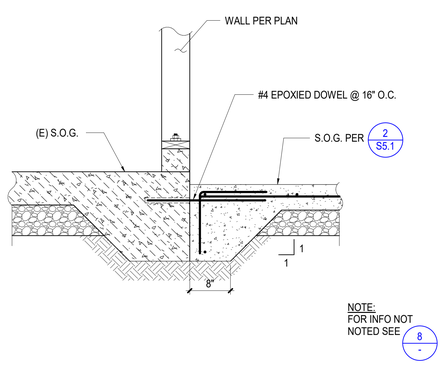

12 SECTION AT (E) THICKENED SLAB

1" = 1'-0"

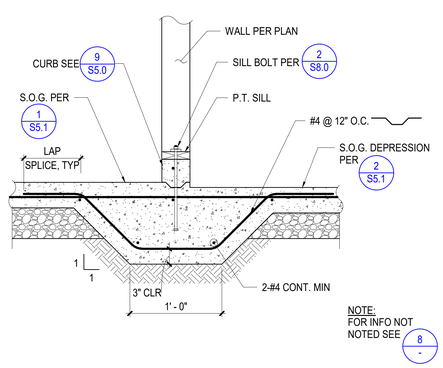

9 THICKENED SLAB AT NON-BEARING WALL

1" = 1'-0"

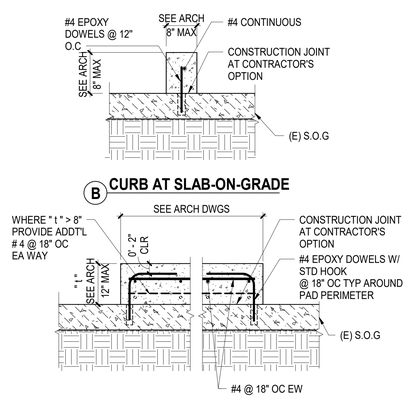

6 CURBS AND HOUSEKEEPING PADS AT (E) S.O.G

NTS

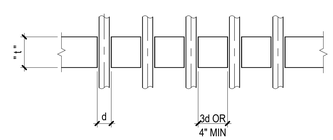

NOTES:
1. DO NOT CUT REINFORCING.
2. IF 4" MINIMUM CLEAR DISTANCE BETWEEN SLEEVES IS NOT POSSIBLE, THIS CONDITION SHALL BE TREATED AS A SLAB OPENING PER DETAIL 5 -
3. USE OF ALUMINUM CONDUIT IS PROHIBITED.

3 PIPING & CONDUIT THROUGH SLAB

NTS

PBK
BERKELEY
2600 TENTH STREET, SUITE 700
BERKELEY, CA 94710-2597
510-450-1999 P

HONEYBEE POOL RENOVATION

CITY OF ROHNERT PARK
1170 GOLF COURSE DRIVE
ROHNERT PARK, CA 94928

LOREN GACHEN C-37926 EXP. 12/31/23 STATE OF CALIFORNIA

REGISTERED PROFESSIONAL ENGINEER GÖKHAN AKALAN NO. 5094 STRUCTURAL STATE OF CALIFORNIA

CONSULTANT
BASE DESIGN
582 MARKET ST. STE. 1402
SAN FRANCISCO, CA 94104
Office:(415) 466-2997
www.BASEdesigninc.com

VANESSA GARRETT P.E. CE84141 — DATE
CITY ENGINEER

REVISION SCHEDULE

NO	DATE	BY	DESCRIPTION
1	11/03/2022		AGENCY PLAN REVIEW
2	12/02/2022		AGENCY PLAN REVIEW

DRAWN: Author	CHECKED: Checker
DATE: 02/25/2022	SCALE: 1" = 1'-0"
PROJECT NUMBER: 2010200	

CONCRETE DETAILS

DRAWING NUMBER: S5.1

AGENCY BACKCHECK

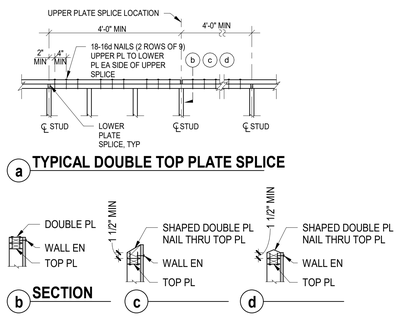

10 DOUBLE TOP PLATE SPLICE

NTS

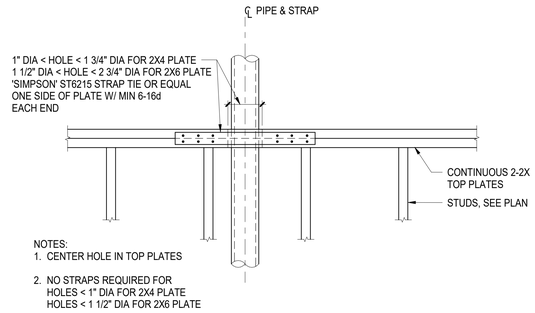

7 TOP PLATE PENETRATIONS

NTS

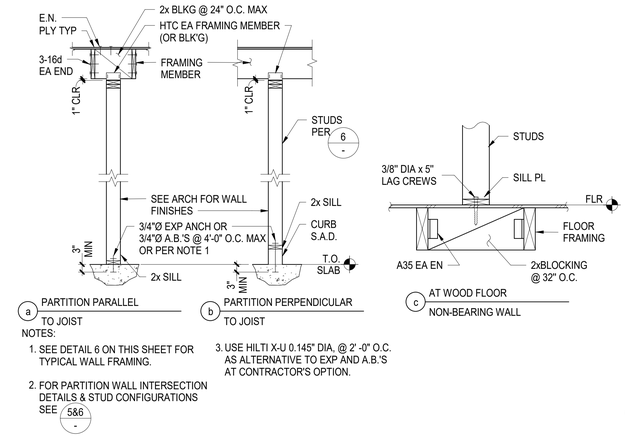

4 NON-BEARING WALL PARTITION

NTS

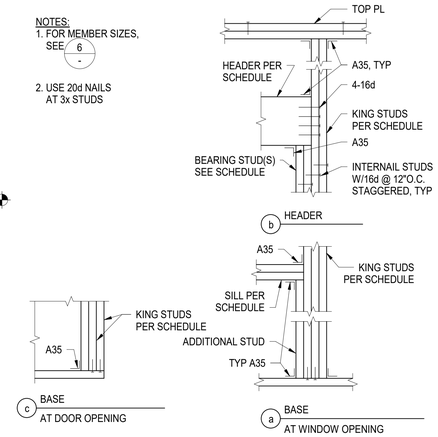

1 WALL OPENING

NTS

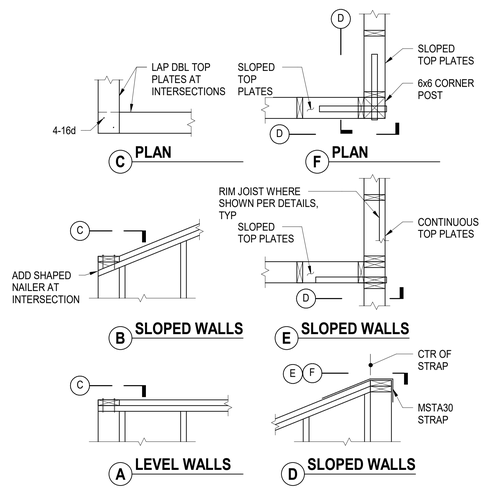

8 TOP PLATE INTERSECTIONS

NTS

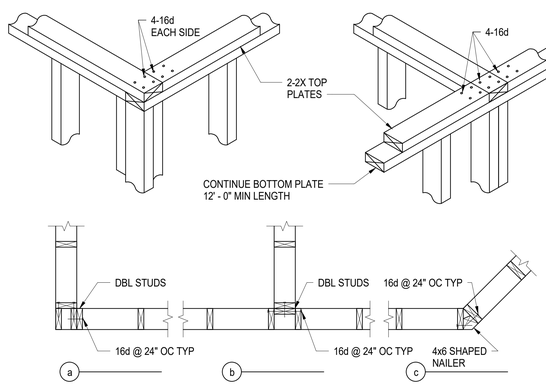

5 WALL INTERSECTIONS

NTS

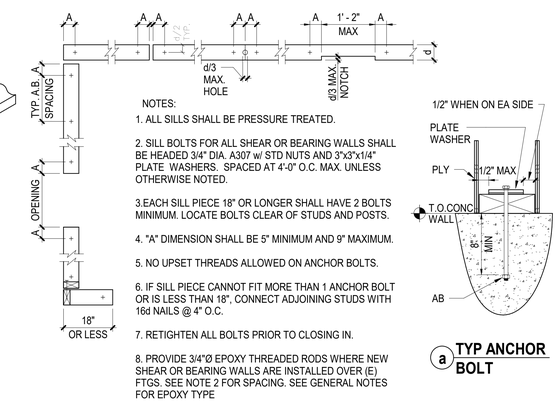

2 ANCHOR BOLT AND SILL PLATE

NTS

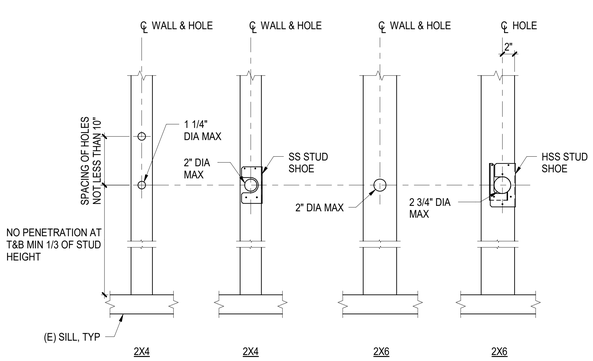

9 PENETRATIONS IN STUDS

NTS

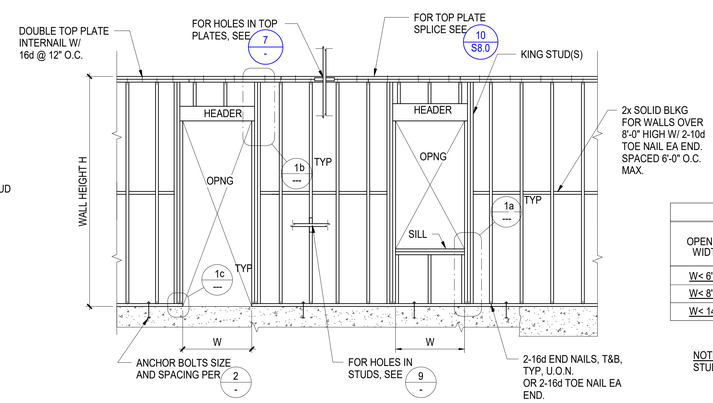

WALL STUD SCHEDULE		
WALL HEIGHT	STUD SIZE	SPACING
H < 15'-0"	2x6	16"

b

WALL SCHEDULE AT OPENINGS				
OPENING WIDTH	KING STUD(S)	HEADER DEPTH	BEARING STUD(S)	SILL
W< 6'-0"	2-2x	6x	1-2x	2-2x
W< 8'-0"	2-2x	10x	2-2x	2-2x
W< 14'-0"	2-2x	PER PLAN	2-2x	2-2x

a

NOTE:
STUD, SILL, AND HEADER WIDTHS TO MATCH WALL FRAMING SIZE.

6 TYPICAL WALL FRAMING

NTS

PBK
BERKELEY
2600 TENTH STREET, SUITE 700
BERKELEY, CA 94710-2597
510-450-1999 P

HONEYBEE POOL RENOVATION

CITY OF ROHNERT PARK
1170 GOLF COURSE DRIVE
ROHNERT PARK, CA 94928

REGISTERED PROFESSIONAL ENGINEER GÖKHAN AKALAN NO. 5594 STRUCTURAL STATE OF CALIFORNIA

REGISTERED PROFESSIONAL ENGINEER C-37926 CIVIL STATE OF CALIFORNIA

CONSULTANT
BASE DESIGN
582 MARKET ST. STE. 1402
SAN FRANCISCO, CA 94104
Office:(415) 466-2997
www.BASEdesigninc.com

VANESSA GARRETT P.E. CE84141 — DATE
CITY ENGINEER

REVISION SCHEDULE

NO	DATE	BY	DESCRIPTION
1	11/03/2022		AGENCY PLAN REVIEW
2	12/02/2022		AGENCY PLAN REVIEW

DRAWN: Author	CHECKED: Checker
DATE: 02/25/2022	SCALE: As indicated
PROJECT NUMBER: 2010200	

WOOD FRAMING DETAILS

DRAWING NUMBER: S8.0

AGENCY BACKCHECK

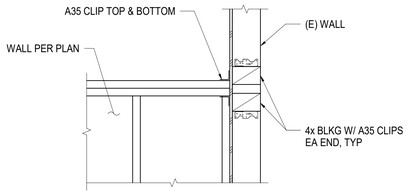

4 DOUBLE TOP PLATE CONNECTION TO (E) WALL

1" = 1'-0"

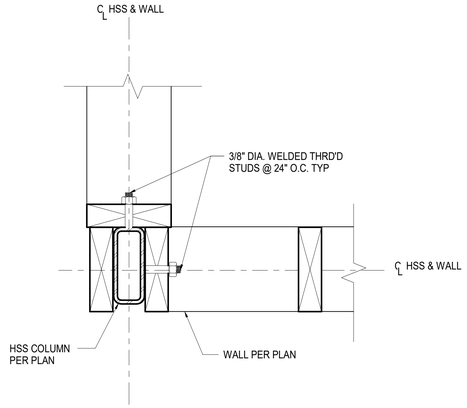

1 HSS POST CONNECTION

3" = 1'-0"

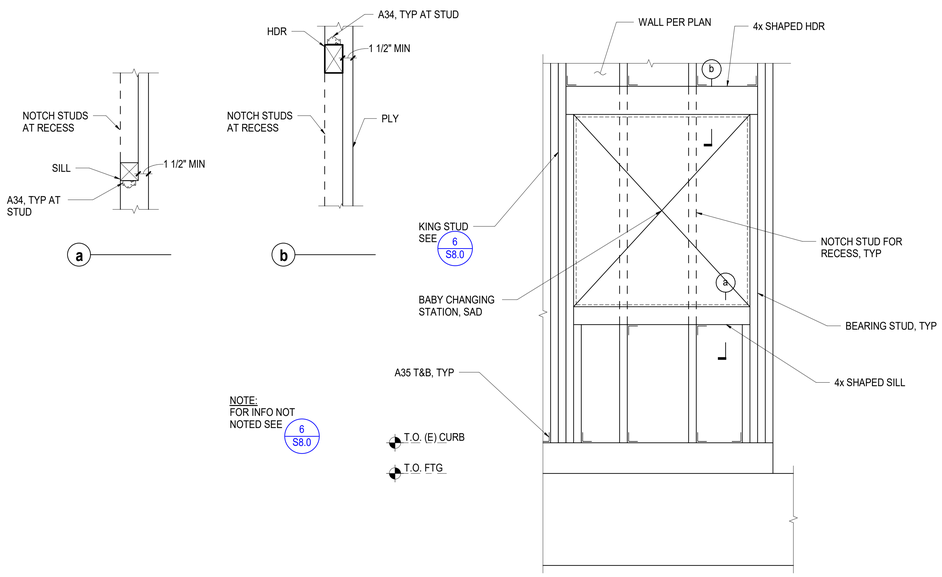

12 ELEVATION AT BABY CHANGING STATION

1" = 1'-0"

CONNECTION	NAILING [a,m]
1. Joist to sill or girder, toenail	3-8d
2. Bridging to joists, toenail each end	2-8d
3. 1" x 6" subfloor or less to each joist, face nail	2-8d
4. Wider than 1" x 6" subfloor to each joist, face nail	3-8d
5. 2" subfloor to joist or girder, blind and face nail	2-16d
6. Sole plate to joist or blocking, typical face nail Sole plate to joist or blocking, at braced wall pannels	16d at 16" o.c. 3-16d per 16"
7. Top plate to stud, end nail	2-16d
8. Stud to sole plate	4-8d, toenail or 2-16d, end nailb(s)
9. Double studs, face nail	16d at 24"o.c.
10. Double top plates, typical face nail	16d at 16" o.c.
11. Blocking between joists or rafters to top plate, toenail	3-8d
12. Rim joist to top plate, toenail	8d at 6" o.c.
13. Top plates, laps and intersections, face nail	2-16d
14. Continuous header, two pieces	16d at 16" o.c. along each side
15. Ceiling joists to plate, toenail	3-8d
16. Continuous header to stud, toenail	4-8d
17. Ceiling joist, laps over partitions, face nail	3-16d[d]
18. Ceiling joists to parallel rafters, face nail	3-16d[d]
19. Joist or rafters at all bearings-toenails, each side	3-8d[f]
20. 1" brace to each stud and plate, face nail	2-8d
21. 1" x 8" sheathing or less to each bearing, face nail	3-8d
22. Wider than 1" x 8" sheathing to each bearing, face nail	3-8d
23. Built-up corner studs	16d at 24" o.c.
24. Built-up girder and beams[5]	20d at 32" o.c. face nail at top & bottom & staggered 2-20d face nail at ends & at each splice
25. 2" planks	16d at each bearing
26. Collar tie to rafter, face nail	3-10d
27. Jack rafter to hip, toenail	3-10d
Jack rafter to hip, toenail	2-16d
28. Roof rafter to 2-by ridge beam, toenail	2-16d
Roof rafter to 2-by ridge beam, face nail	2-16d
29. Joist to band joist, face nail	3-16d
30. Ledger strip, face nail	3-16d
31. Wood structural panels and particleboard Subfloor, roof and wall sheathing (to framing): 1/2" and less 19/32" - 3/4" 7/8" - 1" 1 1/8" - 1 1/4" Combination subfloor-underlayment (to framing): 3/4" and less 7/8" - 1" 1 1/8" - 1 1/4"	 6d[c] 8d[d] or 6d[e] 8d[e] 10d[d] or 8d[d] 6d[e] 8d[e] 10d[d] or 8d[e]
32. Panel siding (to framing): 1/2" or less 5/8"	 6d[f] 8d[f]
33. Fiberboard Sheathing[g] 1/2" 25/32"	 No. 11 ga[h] 6d[d] No. 16 ga[i]. No. 11 ga[h] 8d[d] No. 16 ga[i].
34. Interior paneling 1/4" 3/6"	 4d[j] 6d[k]

FOOTNOTES:

a. USE COMMON WIRE NAILS EXCEPT WHERE OTHERWISE STATED.

b. NAILS SPACED AT 6 INCHES ON CENTER AT EDGES. 12 INCHES AT INTERMDIATE SUPPORTS EXCEPT 6 INCHES AT ALL SUPPORTS WHERE SPANS ARE 48 INCHES OR MORE. FOR NAILING OF WOOD STRUCTURAL PANEL AND PARTICLEBOARD DIAPHRAGMS AND SHEAR WALLS, REFER TO SECTIONS 2305. NAILS FOR WALL SHEATHING MAY BE COMMON, BOX OR CASING.

c. COMMON OR DEFORMED SHANK. (6d-2", 8d-2 1/2", 10d-3")

d. COMMON. (6d-2", 8d-2 1/2", 10d-3")

e. DEFORMED SHANK. (6d-2", 8d-2 1/2", 10d-3")

f. CORROSION-RESISTANT SIDING OR CASING NAILS CONFORMING TO THE REQUIREMENTS OF SECTION 2304.9.5.

g. FASTENERS SPACED 3 INCHES ON CENTER AT EXTERIOR EDGES AND 6 INCHES ON CENTER AT INTERMEDIATE SUPPORTS, WHEN USED AS STRUCTURAL SHEATHING SPACING SHALL BE 6 INCHES ON CENTER ON THE EDGES AND 12" ON CENTER AT INTERMEDIATE SUPPORTS FOR NON STRUCTURAL APPLICATIONS.

h. CORROSION-RESISTANT ROOFING NAILS WITH 7/16" INCH-DIAMETER HEAD AND 1 1/2"-INCH LENGTH FOR 1/2"-INCH SHEATHING AND 1 3/4"-INCH LENGTH FOR 25/32-INCH SHEATHING CONFORMING TO THE REQUIREMENTS OF SECTION 2304.9.5.

i. CORROSION-RESISTANT STAPLES WITH NOMINAL 7/16-INCH CROWN AND 1 1/8-INCH LENGTH FOR 1/2-INCH SHEATHING AND 1 1/2-INCH LENGTH FOR 25/32-INCH SHEATHING CONFORMING TO THE REQUIREMENTS OF SECTION 2304.9.5.

j. CASING OR FINISH NAILS SPACED 6-INCHES ON PANEL EDGES, 12 INCHES AT INTERMEDIATE SUPPORTS.

k. PANEL SUPPORTS AT 24". CASING OR FINISH NAILS SPACED 6" ON PANEL EDGES, 12" AT INTERMEDIATE SUPPORTS.

l. FOR ROOF SHEATHING APPLICATIONS, 8D NAILS ARE THE MINIMUM REQUIRED FOR WOOD STRUCTURAL PANELS.

m. STAPLES SHALL HAVE A MINIMUM CROWN WIDTH OF 7/16 INCH.

n. FOR ROOF SHEATHING APPLICATIONS, FASTENERS SPACED 4 INCHES ON CENTER AT EDGES, 8 INCHES AT INTERMEDIATE SUPPORTS.

o. FASTENERS SPACED 4 INCHES ON CENTER AT EDGES, 8 INCHES AT INTERMEDIATE SUPPORTS FOR SUBFLOOR AND WALL SHEATHING AND 3 INCHES ON CENTER AT EDGES, 6 INCHES AT INTERMEDIATE SUPPORTS FOR ROOF SHEATHING.

p. FASTENERS SPACED 4 INCHES ON CENTER AT EDGES, 8 INCHES AT INTERMEDIATE SUPPORTS.

q. FOR ROOF SLOPES 3:12 OR GREATER IN WHICH CEILING JOISTS SERVE AS A TIE FOR ROOF RAFTERS, MINIMUM NAILING PER CBC TABLE 2308.10.4.1.

r. FOR ROOF SLOPES 3:12 OR GREATER IN WHICH CEILING JOISTS SERVE AS A TIE FOR ROOF RAFTERS, MINIMUM NAILING MUST BE ADEQUATE TO WITHSTAND MINIMUM WIND UPLIFT PER CBC TABLE 2308.10.1.

s. AT 3X SOLE, 2-20D END NAILS SHALL BE USED IN PLACE OF 2-16D END NAILS.

6 NAILING SCHEDULE

NTS

PBK
BERKELEY
2600 TENTH STREET, SUITE 700
BERKELEY, CA 94710-2597
510-450-1999 P

HONEYBEE POOL RENOVATION

CITY OF ROHNERT PARK
1170 GOLF COURSE DRIVE
ROHNERT PARK, CA 94928

REGISTERED PROFESSIONAL ENGINEER
LOREN GACHEN
C – 37926
EXP. 9/30/23
STATE OF CALIFORNIA

REGISTERED PROFESSIONAL ENGINEER
GORMAN AKALAPI
NO. 5694
STRUCTURAL
STATE OF CALIFORNIA

CONSULTANT
BASE DESIGN
582 MARKET ST. STE. 1402
SAN FRANCISCO, CA 94104
Office:(415) 466-2997
www.BASEdesigninc.com

VANESSA GARRETT P.E. CE84141
CITY ENGINEER

DATE

REVISION SCHEDULE

NO	DATE	BY	DESCRIPTION
1	11/03/2022		AGENCY PLAN REVIEW
2	12/02/2022		AGENCY PLAN REVIEW

DRAWN: Author	CHECKED: Checker
DATE: 02/25/2022	SCALE: As indicated
PROJECT NUMBER: 2010200	

FRAMING DETAILS

DRAWING NUMBER: S8.1

AGENCY BACKCHECK

MECHANICAL GENERAL NOTES

1. ENTIRE INSTALLATION SHALL CONFORM TO REQUIREMENTS OF 2016 CALIFORNIA MECHANICAL CODE, 2016 CALIFORNIA BUILDING CODE, AND ALL OTHER APPLICABLE CODES AND REGULATIONS, INCLUDING 2016 CALIFORNIA ENERGY CONSERVATION STANDARDS DIVISION T-24.

2. 2016 CALIFORNIA GREEN BUILDING STANDARDS (CALGREEN) CODE INCLUDING APPLICABLE MANDATORY MEASURES:

   a. COVERING OF DUCT OPENINGS AND PROTECTION OF MECHANICAL EQUIPMENT DURING CONSTRUCTION PER CALGREEN REQUIREMENTS.

   b. ADHESIVES, SEALANTS AND CAULKS SHALL MEET CALGREEN REQUIREMENTS.

   c. FILTERS SHALL BE A MINIMUM EFFICIENCY REPORTING VALUE (MERV) OF 8 OR AS SPECIFIED.

   d. INSTALLATIONS OF HVAC AND REFRIGERATION EQUIPMENT SHALL COMPLY WITH SECTIONS 5.508.1.1 AND 5.508.1.2.

3. ENTIRE INSTALLATION SHALL CONFORM TO REQUIREMENTS OF 2016 CALIFORNIA MECHANICAL CODE, 2016 CALIFORNIA BUILDING CODE, AND ALL OTHER APPLICABLE CODES AND REGULATIONS, INCLUDING 2016 CALIFORNIA ENERGY CONSERVATION STANDARDS DIVISION T-20.

4. COORDINATE ENTIRE INSTALLATION OF HVAC SYSTEM WITH WORK OF ALL OTHER TRADES PRIOR TO ANY FABRICATION OR INSTALLATION. PROVIDE ALL FITTINGS, OFFSETS, AND TRANSITIONS AS REQUIRED FOR A COMPLETE WORKABLE INSTALLATION. MECHANICAL CONTRACTOR SHALL BE RESPONSIBLE TO COORDINATE ITEMS TO BE PROVIDED BY OTHER TRADES WHERE MENTIONED IN THE CONTRACT DOCUMENTS PRIOR TO BID - NO EXCEPTIONS.

5. COORDINATE LOCATIONS OF ALL CEILING DIFFUSERS, REGISTERS, AND GRILLES WITH ARCHITECTURAL REFLECTIVE CEILING PLAN, ELECTRICAL LIGHTING LAYOUT AND ARCHITECTURAL ROOM ELEVATIONS. ARCHITECT AND ENGINEER SHALL BE IMMEDIATELY NOTIFIED OF ANY CONFLICTS PRIOR TO FABRICATION AND INSTALLATION.

6. CONTRACTOR SHALL NOTIFY OWNER AND ENGINEER OF CONSTRUCTION PHASING PRIOR TO START OF CONSTRUCTION, REMOVAL, AND/OR REPLACEMENT OF ANY EQUIPMENT. CONTRACTOR SHALL RECEIVE PERMISSION IN WRITING PRIOR TO START OF ANY WORK DURING ANY PHASE FOR WORK SHOWN HEREIN. IT SHALL BE THE RESPONSIBILITY OF CONTRACTOR TO CONDUCT WORK AND ARRANGE HIS WORK IN A MANNER THAT WILL CAUSE MINIMAL INTERFERENCE WITH DAILY FUNCTIONS WITHIN FACILITY. ANY EXPECTED DOWNTIME SHALL BE COORDINATED WITH THE OWNER.

7. ALL EQUIPMENT, DUCTS, PIPING, AND OTHER DEVICES AND MATERIALS INSTALLED OUTSIDE OF BUILDING OR OTHERWISE EXPOSED TO WEATHER SHALL BE COMPLETELY WEATHER-PROOFED AND PAINTED TO MATCH, COORDINATE WITH ARCHITECT PRIOR TO PAINTING.

8. NOT USED.

9. THESE DRAWINGS SHALL BE READ IN CONJUNCTION WITH AND BE CONSIDERED TO BE PART OF A SEPARATE AND COMPLETE MECHANICAL SPECIFICATION.

10. ALL DIMENSIONS SHOWN ON THESE PLANS ARE APPROXIMATE AND MUST BE CONFIRMED ON SITE.

11. PRIOR TO OCCUPANCY, THE ENTIRE H.V.A.C. SYSTEMS SHALL BE BALANCED IN ACCORDANCE WITH ASSOCIATED AIR BALANCE COUNCIL (AABC) STANDARDS BY AN INDEPENDENT AIR BALANCE CONTRACTOR. CERTIFICATION SHALL BE PROVIDED BY CONTRACTOR FOR AIR AND HYDRONIC AS APPLICABLE. SYSTEMS SHALL BE BALANCED AS INDICATED ON PLANS INCLUDING FRESH AIR VENTILATION. WHERE THERE IS A CONFLICT WITH MECHANICAL PLANS, AIR BALANCE CONTRACTOR SHALL NOTIFY ENGINEER PRIOR TO BALANCING OF SYSTEM. IF NOT, AIR BALANCE CONTRACTOR SHALL BEAR ALL COSTS INCURRED FOR WORK THAT MUST BE RE-BALANCED DUE TO CONFLICTS ON CONTRACT DOCUMENTS. CONTRACTOR SHALL PROVIDE THREE COPIES OF AIR BALANCE REPORT TO ENGINEER FOR APPROVAL.

12. FOR INACCESSIBLE AREAS CONTRACTOR SHALL PROVIDE ACCESS PANELS FOR ALL DAMPERS, EQUIPMENT, SMOKE DETECTORS, AND CONTROL DEVICES. THESE PANELS SHALL MATCH THE RATING OF THE WALL AND/OR CEILING THAT THEY ARE LOCATED IN. MINIMUM ACCESS PANEL SIZES SHALL BE AS FOLLOWS:

    a. HAND ACCESS: 12"x12"

    b. BODY ACCESS: 30"x30" MIN. WHERE A LARGER ACCESS SIZE IS REQUIRED DUE TO INSTALLATION CONSTRAINTS, THE CONTRACTOR SHALL DO SO AT NO ADDITIONAL COST AND SHALL NOTIFY THE ARCHITECT AND ENGINEER OF DEVIATIONS PRIOR TO INSTALLATION.

13. ALL EQUIPMENT, ACCESSORIES, AND RELATED PIPING SHALL BE INSTALLED IN STRICT ACCORDANCE WITH EQUIPMENT MANUFACTURER'S RECOMMENDATIONS. PROVIDE ALL FITTINGS, TRANSITIONS, DAMPERS, VALVES, AND OTHER DEVICES REQUIRED FOR A COMPLETE WORKABLE INSTALLATION.

14. MAINTENANCE LABEL SHALL BE AFFIXED TO ALL MECHANICAL EQUIPMENT AND A MAINTENANCE MANUAL SHALL BE PROVIDED FOR THE OWNER'S USE.

15. PROVIDE 30% MIN. EFFICIENCY THROWAWAY FILTERS FOR ALL AIR CONDITIONING UNITS. SEE EQUIPMENT SCHEDULE AND SPECIFICATIONS FOR TYPE. SIZES SHALL BE AS RECOMMENDED BY THE MANUFACTURER, UNLESS OTHERWISE SPECIFIED.

16. ALL EQUIPMENT WITH MOVING PARTS SHALL BE PROVIDED WITH FLEXIBLE DUCT AND PIPE CONNECTIONS.

17. ALL EQUIPMENT SHALL BE LABELED AS TO SPACE IT SERVES. SEE PLANS AND SPECIFICATIONS FOR IDENTIFICATION STANDARDS.

18. ALL HVAC EQUIPMENT SHALL BE CERTIFIED BY CALIFORNIA ENERGY COMMISSION (CEC) TO COMPLY WITH LATEST EFFICIENCY STANDARDS.

19. ALL FRESH AIR INTAKES SHALL MEET CODE REQUIRED CLEARANCES FROM EXHAUST, FLUE, FUEL BURNING APPLIANCE, AND PLUMBING VENT OUTLETS. FOR GAS/ELECTRIC AIR CONDITIONING UNITS WHERE CODE REQUIRED CLEARANCES ARE NOT MET, A FACTORY FLUE GAS DEFLECTOR AND EXTENSION SHALL BE USED TO MINIMIZE THESE CLEARANCES. CONTRACTOR SHALL DETERMINE LOCATIONS WHERE REQUIRED PRIOR TO BID. THIS SHALL BE PROVIDED AT NO ADDITIONAL COST.

20. ALL AIR HANDLING EQUIPMENT SERVING CONDITIONED SPACES SHALL PROVIDE CONTINUOUS FRESH AIR TO SPACES IN OCCUPIED MODE.

21. CONTRACTOR SHALL VERIFY ALL CLEARANCES AND AVAILABLE SPACE FOR DUCTWORK PRIOR TO ORDERING AND/OR FABRICATING MATERIAL.

22. CONTRACTOR TO SUBMIT ALL EQUIPMENT, DUCTWORK, AIR DISTRIBUTION DEVICES, AND OTHER ACCESSORIES TO ENGINEER FOR APPROVAL PRIOR TO ANY ORDERING OF SUCH ITEMS.

23. CONTRACTOR SHALL PROVIDE SHOP DRAWINGS WITHIN 45 DAYS OF AWARD OF CONTRACT. IF SHOP DRAWINGS ARE NOT PROVIDED TO ENGINEER FOR APPROVAL, AND ANY CONFLICTS OCCUR BETWEEN TRADES, DURING CONSTRUCTION, & ETC. THEN CONTRACTOR SHALL BE RESPONSIBLE AND BEAR ALL COST INCURRED FOR ANY REVISIONS AT NO ADDITIONAL COST TO THE OWNER. THE OWNER AND ENGINEER SHALL BE NOTIFIED IMMEDIATELY PRIOR TO FABRICATION AND INSTALLATION OF ANY CONFLICTS BETWEEN TRADES, DURING CONSTRUCTION, & ETC.

24. CONTRACTOR SHALL BE RESPONSIBLE FOR COMMISSIONING OF EQUIPMENT AS STIPULATED ON MECH-1-C FORM ON PLANS UNLESS NOTED OTHERWISE.

25. PAINT EXPOSED SURFACES, WHETHER OR NOT COLORS ARE DESIGNATED IN SCHEDULES, EXCEPT WHERE A SURFACE OR MATERIAL IS SPECIFICALLY INDICATED NOT TO BE PAINTED OR IS TO REMAIN NATURAL. WHERE AN ITEM OR SURFACE IS NOT SPECIFICALLY MENTIONED, PAINT THE SAME AS SIMILAR ADJACENT MATERIALS OR SURFACES. IF COLOR OR FINISH IS NOT DESIGNATED, THE OWNER'S REPRESENTATIVE WILL SELECT FROM STANDARD COLORS OR FINISHES AVAILABLE.

    a. PAINTING INCLUDES FIELD PAINTING EXPOSED BARE AND COVERED PIPES AND DUCTS (INCLUDING COLOR CODING), HANGERS, EXPOSED STEEL AND IRON WORK, AND PRIMED METAL SURFACES OF MECHANICAL AND ELECTRICAL EQUIPMENT.

----- CONTROLS -----

26. CONTROL SCHEMATICS ARE FOR SEQUENCE ONLY. REFER TO ELECTRICAL DRAWINGS AND SPECIFICATIONS FOR ALL ELECTRICAL DEVICES REQUIRED.

27. ALL LINE VOLTAGE WIRING SHALL BE INSTALLED IN CONDUIT. ALL LINE VOLTAGE CONDUIT AND WIRING, INCLUDING FINAL CONNECTIONS, SHALL BE FURNISHED AND INSTALLED BY THE ELECTRICAL CONTRACTOR AS INDICATED ON THE ELECTRICAL DRAWINGS OR SPECIFIED IN THE ELECTRICAL SECTION OF THE SPECIFICATIONS. ALL ELECTRICAL WORK SHALL BE INSTALLED IN ACCORDANCE WITH ALL APPLICABLE CODES AND REGULATIONS OF ALL GOVERNING BODIES HAVING JURISDICTION THEREOF.

28. ALL LOW VOLTAGE CONDUIT AND WIRING AS APPLICABLE, INCLUDING FINAL CONNECTIONS, SHALL BE FURNISHED AND INSTALLED BY THE MECHANICAL CONTRACTOR AS INDICATED ON THE MECHANICAL DRAWINGS OR SPECIFIED IN THE MECHANICAL SECTION OF THE SPECIFICATIONS.

    a. ALL LOW VOLTAGE WIRING SHALL BE INSTALLED IN CONDUIT.

    b. ALL LOW VOLTAGE WIRING SHALL BE PLENUM - RATED.

    c. WHERE THE CONTROLS CONTRACTOR IS RETAINED BY THE OWNER, THEY SHALL BE RESPONSIBLE FOR THE FOLLOWING:

       - FURNISH AND INSTALL ALL DEVICES, WIRING, AND TERMINATIONS REQUIRED FOR A COMPLETE AND FUNCTIONAL INSTALLATION.

       - COORDINATE ALL WORK AND REQUIREMENTS WITH OTHER TRADES INCLUDING GENERAL, MECHANICAL, AND ELECTRICAL CONTRACTORS PRIOR TO BID.

       - CONTRACTOR SHALL FOLLOW ALL SUBMITTAL REQUIREMENTS PER DRAWINGS AND SPECIFICATIONS.

29. CONTRACTOR SHALL BE RESPONSIBLE FOR ORDERING AIR CONDITIONING EQUIPMENT WITH THRU-THE-BASE POWER, CONTROL, AND GAS CONNECTIONS. VERIFY ALL CONNECTION LOCATIONS WITH UNIT MANUFACTURER AND COORDINATE WITH OTHER TRADES AS NECESSARY.

30. ALL THERMOSTATS SHALL HAVE LOCKABLE COVERS (WHERE INDICATED ON PLANS) AND SHALL BE OF THE ELECTRONIC, PROGRAMMABLE, AUTOMATIC CHANGEOVER TYPE TO SEQUENCE HEATING OR COOLING. SET POINT RANGE SHALL BE 10° F. BETWEEN FULL HEATING AND COOLING. THEY SHALL HAVE CAPABILITY OF TERMINATING ALL HEATING AT A TEMPERATURE NO MORE THAN 70° F., AND COOLING AT A TEMPERATURE NOT LESS THAN 78° F. ADJUSTABLE TEMPERATURE DIFFERENTIAL SHALL BE 1½° F. CONTROL LIMITS SHALL BE FROM 55° F. TO 85° F. MOUNT AT 48" ABOVE FLOOR OR AS REQUIRED BY LOCAL AUTHORITIES OR HANDICAP CODES.

    NOTE:
    a. THERMOSTATS THAT ARE PART OF AN ENERGY MANAGEMENT SYSTEM SHALL FOLLOW CONTROL SPECIFICATIONS AND DRAWING REQUIREMENTS.

    b. SHOULD THE LOCATION OF THE THERMOSTAT NOT MEETS ADA HEIGHT REQUIREMENTS DUE TO OBSTRUCTIONS, THEN AN ALTERNATE LOCATION SHALL BE PROPOSED OR REQUESTED BY CONTRACTOR THAT SHALL BE APPROVED BY ENGINEER AND ARCHITECT.

31. LINE VOLTAGE THERMOSTATS SHALL BE FURNISHED BY MECHANICAL CONTRACTOR AND INSTALLED BY ELECTRICAL CONTRACTOR.

32. CONTROLS CONTRACTOR AND AIR BALANCE CONTRACTOR SHALL COORDINATE WORK AND PERFORM NECESSARY TASKS AS REQUIRED TO OBTAIN AIR AND WATER FLOW QUANTITIES FOR SYSTEMS SHOWN HEREIN.

33. CONTROLS SHALL BE PROVIDED TO PROVIDE THE MINIMUM RATE OF OUTDOOR AIR REQUIRED BY THE STATE ENERGY REGULATIONS.

----- AIR DISTRIBUTION -----

34. ALL DUCTWORK SHALL BE SHEET METAL CONSTRUCTED OR SPIRAL, ERECTED, AND TESTED IN ACCORDANCE WITH THE MOST RESTRICTIVE OF LOCAL REGULATIONS, PROCEDURES DETAILED IN THE ASHRAE HANDBOOK OF FUNDAMENTALS, CHAPTER 6 OF THE MECHANICAL CODE, OR THE APPLICABLE STANDARDS ADOPTED BY THE SHEET METAL AND AIR CONDITIONING CONTRACTORS NATIONAL ASSOCIATION.

35. ALL FLEXIBLE DUCTWORK SHALL NOT EXCEED 5'-0" IN LENGTH TO RESPECTIVE DIFFUSERS, GRILLES, AND REGISTERS, OR OTHER AIR DEVICES.

36. PROVIDE SEISMIC RESTRAINTS TO ALL DUCTWORK, PIPE, AND EQUIPMENT SUPPORTS IN ACCORDANCE WITH THE LATEST SMACNA GUIDELINES FOR SEISMIC RESTRAINT OF MECHANICAL SYSTEMS. SUSPENDED EQUIPMENT SHALL BE PROVIDED WITH SEISMIC ANCHORAGE AND ISOLATION SUPPORTS.

37. ALL DUCT TURNS IN SUPPLY, RETURN, AND EXHAUST DUCTS SHALL HAVE TURNING VANES UNLESS OTHERWISE NOTED.

38. DUCTWORK HANDLING CONDITIONED AIR SHALL BE INSULATED OR LINED AS INDICATED ON DRAWINGS. SUPPLY AND RETURN DUCT INSULATION SHALL BE MIN. 2" THICK, ¾" LB./CUBIC FT. DENSITY AND HAVE A MIN. VALUE OF R-8 WHERE LOCATED IN ONE OR MORE OF THE FOLLOWING SPACES:

    a. OUTDOORS, OR

    b. IN A SPACE BETWEEN THE ROOF AND AN INSULATED CEILING, OR

    c. IN A SPACE DIRECTLY UNDER A ROOF WITH FIXED VENTS OR OPENINGS TO THE OUTSIDE OR UNCONDITIONED SPACES, OR

    d. IN AN UNCONDITIONED CRAWLSPACE; OR

    e. IN OTHER UNCONDITIONED SPACES

    OTHERWISE PROVIDE R-8 WHEN LOCATED IN CONDITIONED ATTIC SPACES ABOVE CEILINGS . ALL DUCTWORK EXPOSED ON ROOF SHALL BE INTERNALLY LINED WITH 2" THICK, 1½ LB./CUBIC FT. DENSITY DUCT LINER UNLESS OTHERWISE INDICATED OR SPECIFIED. ALL DUCT SIZES ARE SHEET METAL SIZES. ALL DUCT JOINTS SHALL BE SEALED PER CHAPTER 6 MECHANICAL CODE REQUIREMENTS. PROVIDE PIPING AND DUCT INSULATION IN ACCORDANCE WITH THE LATEST STANDARDS OF THE CALIFORNIA ENERGY COMMISSION.

39. ALL INSULATION SHALL HAVE A FLAME SPREAD OF NOT MORE THAN 25 AND A SMOKE DENSITY NOT EXCEEDING 50.

40. MANUAL VOLUME DAMPER SHALL BE PROVIDED IN ALL DUCT BRANCHES TO INDIVIDUAL DIFFUSERS, GRILLES, AND REGISTERS, AS WELL AS FRESH AIR INTAKE DUCTS. DAMPERS SHALL BE LOCATED AT THE BRANCH DUCT LOCATIONS. MECHANICAL CONTRACTOR SHALL COORDINATE LOCATIONS OF DAMPERS WITH AIR BALANCE CONTRACTOR PRIOR TO BID, SO THEY ARE ACCESSIBLE PRIOR TO BID, SO THEY ARE ACCESSIBLE PRIOR TO INSTALLATION. IN LOCATIONS WHERE THESE DAMPERS ARE INACCESSIBLE, CABLE OPERATED ADJUSTMENT CONTROLS SHALL BE PROVIDED AT NO ADDITIONAL COST. OPPOSED BLADE DAMPERS SHALL NOT BE PERMITTED UNLESS NOTED OTHERWISE.

41. ALL DUCTWORK, PIPING, CONDUIT, & ETC. PENETRATING FIRE RATED CONSTRUCTION SHALL HAVE APPROVED FIRE STOPPING.

---- EXISTING CONDITIONS ----

42. BEFORE BIDDING ON THIS WORK, THE CONTRACTOR SHALL MAKE A CAREFUL EXAMINATION OF THE PREMISES, EXISTING EQUIPMENT AND SERVICES. HE SHALL DEFINITELY DETERMINE IN ADVANCE, THE METHODS OF INSTALLING AND CONNECTING THE NEW EQUIPMENT, DUCTWORK, AND PIPING THE MEANS TO BE PROVIDED FOR GETTING THE EQUIPMENT AND MATERIALS INTO PLACE AND SHALL MAKE HIMSELF THOROUGHLY FAMILIAR WITH ALL OF THE REQUIREMENTS OF THE PROJECT. FAILURE TO VISIT THE SITE WILL IN NO WAY RELIEVE THE SUCCESSFUL CONTRACTOR OF THE NECESSITY OF FURNISHING ANY MATERIAL OR PERFORMING ANY WORK THAT MAY BE REQUIRED TO COMPLETE THE WORK IN ACCORDANCE WITH THE DRAWINGS AND SPECIFICATIONS. THIS ADDITIONAL SHALL BE PERFORMED WITHOUT ADDITIONAL COST TO THE OWNER.

43. CONTRACTOR SHALL VERIFY PRIOR TO CONSTRUCTION THE CONDITION OF EXISTING EQUIPMENT, DUCTWORK, ASSOCIATED CONTROLS, AND T-STATS. SHOULD ANY OF THESE ITEMS NOT BE PERFORMING SATISFACTORILY OR MALFUNCTIONING, CONTRACTOR SHALL NOTIFY TENANT AND/OR OWNER AND PROVIDE A COST TO ENSURE PROPER OPERATION PRIOR TO COMPLETION OF WORK.

44. BEFORE COMMENCEMENT OF WORK, THE CONTRACTOR SHALL VERIFY THE EXACT LOCATIONS AND DIMENSIONS OF ALL EXISTING EQUIPMENT AND ELECTRICAL SERVICES IN THE AREA OF CONSTRUCTION AND NOTIFY THE ENGINEER AND ARCHITECT OF ANY DISCREPANCIES.

45. ALL CONNECTIONS AND DISCONNECTIONS TO EXISTING EQUIPMENT SHALL BE MADE IN SUCH A MANNER THAT INTERRUPTION TIME SHALL BE KEPT TO A MINIMUM. THE CONTRACTOR SHALL GIVE THE OWNER'S REPRESENTATIVE SUFFICIENT NOTICE OF SUCH INTERRUPTION AND THE ACTUAL SHUTDOWN TIME SHALL BE AT A TIME DESIGNATED BY THE OWNER'S REPRESENTATIVE.

LEGEND

SYMBOL	ABBR.	DESCRIPTION
	-	SUPPLY AIR RISER
	-	RETURN AIR RISER
	-	EXHAUST AIR RISER
	(E) SAG	EXISTING SUPPLY AIR GRILLE
	(E) RAG	EXISTING RETURN AIR GRILLE
	(E) EAG	EXISTING EXHAUST AIR GRILLE
	(N) SAG	NEW SUPPLY AIR GRILLE
	(N) RAG	NEW RETURN AIR GRILLE
	(N) EAG	NEW EXHAUST AIR GRILLE
	SWR	SIDEWALL REGISTER
	(L)	LINED DUCTWORK
	-	FLEXIBLE CONNECTION
	FC	FLEXIBLE CONNECTION
	-	NEW DUCT (SEE PLAN)
	-	EXISTING DUCT (SEE PLAN)
	-	DEMO DUCT (SEE PLAN)
	MVD	MANUAL VOLUME DAMPER
	BDD	BACKDRAFT DAMPER
SFD	SFD	SMOKE / FIRE DAMPER
FD	FD	FIRE DAMPER
	DL	DOOR LOUVER
U.C.	UC	3/4" UNDERCUT DOOR
RS	RS	REFRIGERANT SUCTION LINE
RL	RL	REFRIGERANT LIQUID LINE
CD	CD	CONDENSATE DRAIN
	S.D.	SMOKE DETECTOR
	P.O.C.	POINT OF CONNECTION
T	T-STAT	THERMOSTAT
H	H	HUMIDISTAT
TS	TS	TEMPERATURE SENSOR
OS	OS	OVERRIDE SWITCH
PD	PD	PRESSURE DIFFERENTIAL SWITCH
S	S	SWITCH
	O.C.	ON CENTER
	HWR	HOT-WATER RETURN
	HWS	HOT-WATER SUPPLY
	I.D.	INSIDE DIAMETER
	O.D.	OUTSIDE DIAMETER
	W/	WITH
	S/M	SHEET METAL
	S/S	STAINLESS STEEL
	G.C.	GENERAL CONTRACTOR
	VTR	VENT THRU ROOF
	EMS	ENERGY MANAGEMENT SYSTEM
	OBD	OPPOSED BLADE DAMPER
	FSC	FAN SPEED CONTROL
E	E	ITEMS FURNISHED AND INSTALLED BY ELECTRICAL CONTRACTOR AS SPECIFIED ON THE ELECTRICAL CONTRACT DOCUMENTS
M	M	ITEMS FURNISHED AND INSTALLED BY MECHANICAL CONTRACTOR AS SPECIFIED ON THE MECHANICAL CONTRACT DOCUMENTS
EM	EM	ITEMS FURNISHED BY ELECTRICAL CONTRACTOR AND INSTALLED BY MECHANICAL CONTRACTOR.
ME	ME	ITEMS FURNISHED BY MECHANICAL CONTRACTOR AND INSTALLED BY ELECTRICAL CONTRACTOR.
CC	C.C.	CONTROLS CONTRACTOR
	CBD	COUNTER-BALANCE DAMPER
DS	D.S.	DOOR SWITCH

MECHANICAL SHEET LIST

Sheet Number	Sheet Title
M0.1	MECHANICAL GENERAL NOTES AND LEGEND
M2.0	MECHANICAL FLOOR PLAN - DEMO & NEW
M3.0	MECHANICAL ROOF PLAN
M6.1	MECHANICAL DETAILS

APPLICABLE CODES AND STANDARDS

2016 CALIFORNIA BUILDING STANDARDS ADMINISTRATIVE CODE, PART 1, TITLE 24 C.C.R.
2016 CALIFORNIA BUILDING CODE (CBC), PART 2, TITLE 24 C.C.R.
(2015 INTERNATIONAL BUILDING CODE VOLUME 1-3 AND 2016 CALIFORNIA AMENDMENTS)
2016 CALIFORNIA ELECTRICAL CODE (CEC), PART 3, TITLE 24 C.C.R.
(2014 NATIONAL ELECTRICAL CODE AND 2016 CALIFORNIA AMENDMENTS)
2016 CALIFORNIA MECHANICAL CODE (CMC), PART 4, TITLE 24, C.C.R.
(2015 UNIFORM MECHANICAL CODE AND 2016 CALIFORNIA AMENDMENTS)
2016 CALIFORNIA PLUMBING CODE (CPC), PART 5, TITLE 24 C.C.R,
(2015 UNIFORM PLUMBING CODE AND 2016 CALIFORNIA AMENDMENTS)
2016 CALIFORNIA FIRE CODE, PART 9, TITLE 24 C.C.R.
(2015 INTERNATIONAL FIRE CODE AND 2016 CALIFORNIA AMENDMENTS)
2016 CALIFORNIA REFERENCED STANDARDS, PART 12, TITLE 24 C.C.R.
TITLE 19 C.C.R. PUBLIC SAFETY, STATE FIRE MARSHAL REGULATIONS

FOR A FULL SET OF STANDARDS CURRENTLY ADOPTED BY THE STATE OF CALIFORNIA, SEE CBC CHAPTER 35 AND CFC CHAPTER 47. CURRENT REFERENCE STANDARDS APPLICABLE TO FIRE AND LIFE SAFETY, INCLUDED BUT ARE NOT LIMITED TO THE FOLLOWING:

2013 NFPA 10 PORTABLE FIRE EXTINGUISHERS.
2016 NFPA 13 INSTALLATION OF SPRINKLER SYSTEMS + CALIFORNIA AMENDMENTS.
2013 NFPA 14 INSTALLATION OF STANDPIPE, PRIVATE HYDRANT AND HOSE SYSTEMS.
2016 NFPA 72 NATIONAL FIRE ALARM CODE - SEE CA AMENDMENTS.
2016 NFPA 20 INSTALLATION OF STATIONARY PUMPS FOR FIRE PROTECTION.
2013 NFPA 22 WATER TANKS FOR PRIVATE FIRE PROTECTION.
2016 NFPA 24 INSTALLATION OF PRIVATE FIRE SERVICES MAINS + CALIFORNIA AMENDMENTS.
2016 NFPA 80 FIRE DOORS AND OTHER OPENING PROTECTIVES.
2016 NFPA 110 EMERGENCY AND STANDBY POWER SYSTEMS.
2012 ICC 300 BLEACHERS, FOLDING AND TELESCOPIC SEATING AND GRANDSTANDS (ICC 300-2012).
2013 NFPA 17A WET CHEMICAL EXTINGUISHING SYSTEMS.
2005 (R2010) UL - 300 FOR CLASS I HOOD FIRE SUPPRESSION SYSTEM.
2015 NFPA 2001 CLEAN AGENT FIRE EXTINGUISHING SYSTEMS.
TITLE 19 CCR STATE FIRE MARSHAL REGULATIONS.

SEISMIC NOTES

MEP COMPONENT ANCHORAGE NOTE:

ALL MECHANICAL, PLUMBING AND ELECTRICAL COMPONENTS SHALL BE ANCHORED AND INSTALLED PER THE DETAILS ON APPROVED CONSTRUCTION DOCUMENTS. WHERE NO DETAIL IS INDICATED, THE FOLLOWING COMPONENTS SHALL BE ANCHORED OR BRACED TO MEET THE FORCE AND DISPLACEMENT REQUIREMENTS PRESCRIBED IN THE 2016 CBC, SECTION 1616A.1.18 THROUGH 1616A.1.26 AND ASCE 7-10 CHAPTER 13, 26 AND 30.

1. ALL PERMANENT EQUIPMENT AND COMPONENTS.
2. TEMPORARY OR MOVABLE EQUIPMENT THAT IS PERMANENTLY ATTACHED (e.g. HARD WIRE) TO THE BUILDING UTILITY SERVICES SUCH AS ELECTRICITY, GAS OR WATER.
3. MOVABLE EQUIPMENT WHICH IS STATIONED IN ONE PLACE FOR MORE THAN 8 HOURS AND HEAVIER THAN 400 POUNDS ARE REQUIRED TO BE ANCHORED WITH TEMPORARY ATTACHMENTS.

THE ATTACHMENT OF THE FOLLOWING MECHANICAL AND ELECTRICAL COMPONENTS SHALL BE POSITIVELY ATTACHED TO THE STRUCTURE, BUT NEED NOT BE DETAILED ON THE PLANS. THE PROJECT INSPECTOR WILL VERIFY THAT THESE ITEMS HAVE BEEN POSITIVELY ATTACHED. THESE COMPONENTS SHALL HAVE FLEXIBLE CONNECTIONS PROVIDED BETWEEN THE COMPONENT AND ASSOCIATED DUCTWORK, PIPING AND CONDUIT.

A. COMPONENTS WEIGHING LESS THAN 400 POUNDS AND HAVE A CENTER OF MASS LOCATED 4 FEET OR LESS ABOVE THE ADJACENT FLOOR OR ROOF LEVEL THAT DIRECTLY SUPPORT THE COMPONENT.
B. COMPONENTS WEIGHING LESS THAN 20 POUNDS, OR IN THE CASE OF DISTRIBUTED SYSTEMS, LESS THAN 5 POUNDS PER FOOT, WHICH ARE SUSPENDED FROM A ROOF OR FLOOR OR HUNG FROM A WALL.

FOR THOSE ELEMENTS THAT DO NOT REQUIRE DETAILS ON THE APPROVED DRAWINGS, THE INSTALLATION SHALL BE SUBJECT TO THE APPROVAL OF THE MECHANICAL/ELECTRICAL ENGINEER.

PIPING, DUCTWORK, AND ELECTRICAL DISTRIBUTION SYSTEM BRACING NOTE:

PIPING, DUCTWORK AND ELECTRICAL DISTRIBUTION SYSTEMS SHALL BE BRACED TO COMPLY WITH THE FORCES AND DISPLACEMENTS PRESCRIBED IN ASCE 7-10 SECTION 13.3 AS DEFINED IN ASCE 7-10 SECTION 13.6.8, 13.6.7. 13.6.5.6 AND 2016 CBC, SECTIONS 1616A.1.24, 1616A.1.25 AND 1616A.1.26.

THE METHOD OF SHOWING BRACING AND ATTACHMENTS TO THE STRUCTURE FOR THE IDENTIFIED DISTRIBUTION SYSTEM ARE AS NOTED BELOW. WHEN BRACING AND ATTACHMENTS ARE BASED ON A PREAPPROVED INSTALLATION GUIDE (EG., SMACNA OR OSHPD OPM), COPIES OF THE BRACING SYSTEM INSTALLATION GUIDE OR MANUAL SHALL BE AVAILABLE ON THE JOBSITE PRIOR TO THE START OF AND DURING THE HANGING AND BRACING OF THE DISTRIBUTION SYSTEMS. THE STRUCTURAL ENGINEER OF RECORD SHALL VERIFY THE ADEQUACY OF THE STRUCTURE TO SUPPORT THE HANGER AND BRACE LOADS.

MECHANICAL PIPING (MP), MECHANICAL DUCTS (MD), PLUMBING PIPING (PP), ELECTRICAL DISTRIBUTION SYSTEMS (E):

MP___ MD___ PP___ E___ - OPTION 1: DETAILED ON THE APPROVED DRAWINGS WITH PROJECT SPECIFIC NOTES AND DETAILS.

MP___ MD___ PP___ E___ - OPTION 2: SHALL COMPLY WITH THE APPLICABLE OSHPD PRE-APPROVAL (OPM#) #0203-13

MP X MD X PP ___ - OPTION 3: SHALL COMPLY WITH THE SMACNA SEISMIC RESTRAINT MANUAL, OSHPD EDITION (2009), INCLUDING ANY ADDENDA. FASTENERS AND OTHER ATTACHMENTS NOT SPECIFICALLY IDENTIFIED IN THE SMACNA SEISMIC RESTRAIN MANUAL, OSHPD EDITION, ARE DETAILED ON THE APPROVED DRAWINGS WITH PROJECT SPECIFIC NOTES AND DETAILS. THE DETAILS SHALL ACCOUNT FOR THE APPLICABLE SEISMIC HAZARD LEVEL C AND CONNECTION LEVEL III FOR THE PROJECT AND CONDITIONS.

COPIES OF THE MANUAL SHALL BE AVAILABLE ON THE JOBSITE PRIOR TO THE START OF HANGING AND BRACING OF THE PIPE, DUCTWORK AND ELECTRICAL DISTRIBUTION SYSTEMS.

THE STRUCTURAL ENGINEER OF RECORD SHALL VERIFY THE ADEQUACY OF THE STRUCTURE TO SUPPORT THE HANGER AND BRACE LOADS.

EXHAUST FAN SCHEDULE

1 (revision)

SYM	MFR & MODEL #	AREA SERVICED	CFM	ESP IN.WG.	FAN RPM	TIP SPEED FT/MIN	WATTS (W)	ELECTRICAL V	ELECTRICAL PH	WT LBS	CONTROL DETAIL	REF. DETAIL	REMARKS
EF 1	GREENHECK SP-A710	WOMEN 101	430	0.35	925	-	285	115	1	34	2 M6.1	1 M6.1	1, 2, 3, 4
EF 2	GREENHECK SP-B110	JANITOR 103	80	0.3	801	-	80	115	1	11	2 M6.1	1 M6.1	1, 2, 3, 4
EF 3	GREENHECK SP-A710	MEN 102	430	0.35	925	-	285	115	1	34	2 M6.1	1 M6.1	1, 2, 3, 4
EF 4	GREENHECK SP-A510	CONCESSION 104	275	0.35	899	-	224	115	1	33	2 M6.1	1 M6.1	1, 2, 3, 4
EF 5	GREENHECK SP-A510	OFFICE 105	275	0.35	899	-	224	115	1	33	2 M6.1	1 M6.1	1, 2, 3, 4

1. BDD
2. ROOF CAP
3. INTERLOCK THE LIGHT SWITCH
4. FSC (MOUNT ON FAN FOR AIR BALANCE ONLY)

NOTE: CEILING MOUNTED EXHAUST FANS TO BE MOUNTED ON VIBRATION ISOLATION SPRING HANGERS, SIZED FOR MINIMUM 1" STATIC DEFLECTION UNDER ACTUAL LOADS.

PBK

BERKELEY
2600 TENTH STREET, SUITE 700
BERKELEY, CA 94710-2597
510-450-1999 P

HONEYBEE POOL RENOVATION

CITY OF ROHNERT PARK
1170 GOLF COURSE DRIVE
ROHNERT PARK, CA 94928

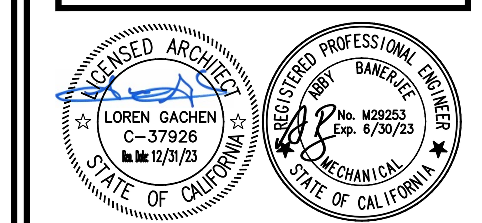

CONSULTANT
oed optimum energy design
Consulting Engineers
5515 Doyle Street
Suite 4
Emeryville, CA 94608
Telephone: (510) 837-9182

VANESSA GARRETT P.E. CE84141 CITY ENGINEER — DATE

REVISION SCHEDULE			
NO	DATE	BY	DESCRIPTION
1	5/25/2022		AGENCY PLAN REVIEW
2	12/02/2022		AGENCY PLAN REVIEW

DRAWN:	CHECKED:
DATE: 02/25/2022	SCALE:
PROJECT NUMBER: 2010200	

MECHANICAL GENERAL NOTES AND LEGEND

DRAWING NUMBER: **M0.1**

100% CD SUBMITTAL

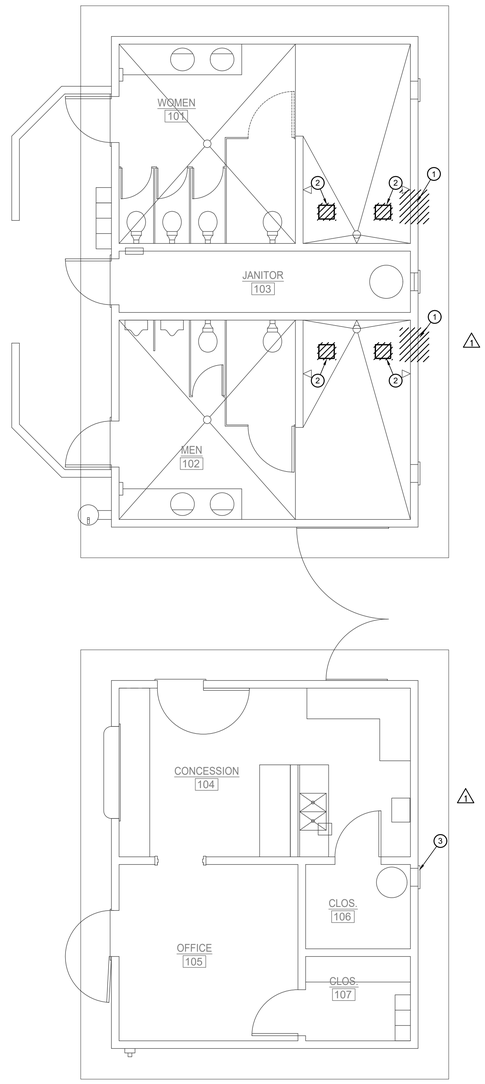

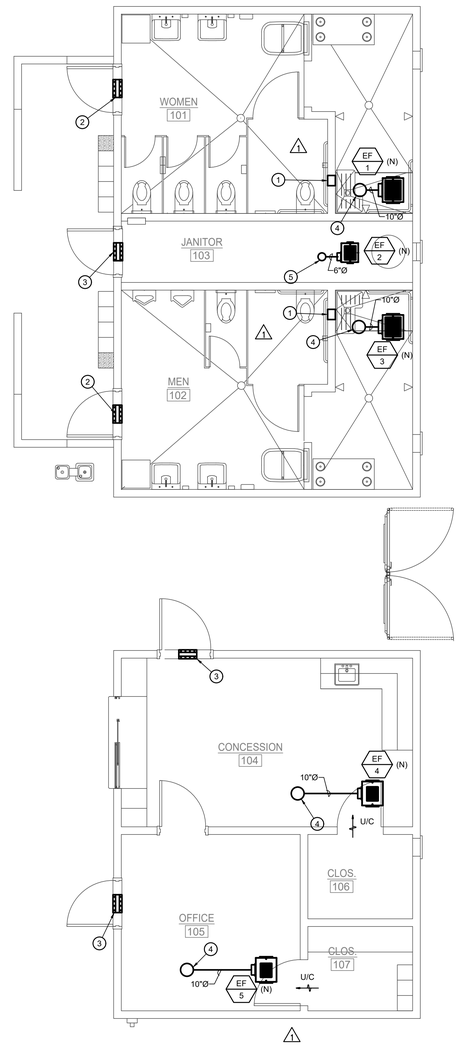

DEMOLITION GENERAL NOTES

1. PATCHED AND REPAIR EXISTING SURFACES AS REQUIRED TO COMPLETE THE WORK.
2. ALL NEW WORK SHALL MATCH EXISTING IN KIND, QUALITY AND FINISH UNLESS OTHERWISE NOTED.
3. CONTRACTOR SHALL INCLUDE IN SCOPE OF WORK. ALL WORK REQUIRED TO PATCH, FINISH, MATCH, AND BLEND NEW SURFACES TO EXISTING AS IMPACTED BY AREAS OF NEW WORK.
4. CONTRACTOR SHALL VISIT THE JOB SITE AND VERIFY THE SCOPE OF DEMOLITION WORK. DEMOLITION IS INDICATED AS A CONVENIENCE FOR THE CONTRACTOR AND MAY NOT INDICATE THE FULL SCOPE OF DEMOLITION REQUIRED TO COMPLETE THE NEW WORK.
5. CONTRACTOR SHALL COORDINATE WITH OWNER PRIOR TO ANY WORK BEING DONE FOR THE REMOVAL, RELOCATION, AND/OR REUSE OF MECHANICAL EQUIPMENT DURING CONSTRUCTION.
6. PRIOR TO ANY WORK BEING DONE, CONTRACTOR SHALL MAKE A CAREFUL EVALUATION OF EXISTING CONDITIONS AND VERIFY ALL METHODS OF REMOVAL AND INSTALLATION OF MECHANICAL EQUIPMENT.
7. CONTRACTOR SHALL COORDINATE ALL DEMOLITION WORK WITH THE WORK OF ALL OTHER TRADE PARTNERS.
8. PATCH AND REPAIR EXISTING SURFACES AS REQUIRED TO FACILITATE DEMOLITION AND/OR PERFORMANCE OF THE NEW WORK. ALL NEW WORK SHALL MATCH IN KIND, QUALITY AND FINISH U.O.N.

DEMOLITION KEY NOTES

1. DEMOLISH EXISTING WALL LOUVER. FIELD VERIFY EXACT LOCATION. PATCH AND REPAIR EXISITNG WALL OPENING TO MATCH.
2. REMOVE EXISTING EXHAUST FAN AND ALL ASSOCIATED VENTILATION AND ELECTRICAL CONNECTIONS. REMOVE EXISTING EXHAUST DUCTWORK UP THROUGH ROOF. FILED VERIFY EXXACT LOCATION. RE-USE EXISITNG ROOF OPENING FOR NEW EXHAUST DUCTWORK. PATCH AND REPAIR UNUSED OPENING.
3. EXISTING WALL LOUVER TO REMAIN. FIELD VERIFY EXACT LOCATION.

CONSTRUCTION KEYNOTES

1. PROVIDE 8"X8" TRANSFER GRILLE INSTALL AS HIGH AS POSSIBLE BELOW CEILING.
2. PROVIDE 24"X18" OUTSIDE AIR DOOR LOUVER WITH MIN. 35% FREE AREA.
3. PROVIDE 14"X18" OUTSIDE AIR DOOR LOUVER WITH MIN. 35% FREE AREA.
4. 10"Ø EXHUAST DUCT UP THRU ROOF.
5. 6"Ø EXHUAST DUCT UP THRU ROOF.

NORTH

MECHANCIAL - EXISTING DEMOLITION FLOOR PLAN | 1/4" = 1'-0" | 2

NORTH

MECHANCIAL - REMODEL FLOOR PLAN | 1/4" = 1'-0" | 1

NEW CONSTRUCTION GENERAL NOTES

1. PROVIDE IN-FILL AND PATCH WORK TO LARGER, UNUSED WALL & ROOF PENETRATIONS.
2. CONTRACTOR SHALL COORDINATE WORK WITH OTHER TRADES AS NECESSARY PRIOR TO INSTALLATION.
3. CONTRACTOR SHALL MAINTAIN PROPER CLEARANCES FROM ALL ELECTRICAL EQUIPMENT AND SERVICE CLEARANCES FOR MECHANICAL EQUIPMENT.
4. CONTRACTOR SHALL COORDINATE ALL LOCATIONS OF DUCT PENETRATIONS THRU' SHEAR WALLS. ANY NEW PENETRATION REQUIRED WHICH DEVIATES FROM THE APPROVED PLANS DUE TO UNFORESEEN FIELD CONDITIONS, CONTRACTOR SHALL SUBMIT TO AOR, SEOR AND MEOR FOR REVIEW AND APPROVAL PRIOR TO PROCEEDING WITH ANY WORK.
5. CONTRACTOR SHALL REFER TO STRUCTURAL, MECHANICAL, AND ARCHITECTURAL PLANS FOR EXTERIOR LOUVER LOCATIONS. CONTACT THE ENGINEER IMMEDIATELY IF THERE ARE CONFLICTS PRIOR TO FABRICATION AND INSTALLATION AND REFER TO ARCHITECTURAL EXTERIOR ELEVATION PLANS FOR MOUNTING HEIGHTS. IF MOUNTING HEIGHTS ARE NOT IDENTIFIED ON THE ARCHITECTURAL PLANS, THEN THE CONTRACTOR SHALL RECEIVE FINAL APPROVAL FROM THE ARCHITECT PRIOR TO FABRICATION AND INSTALLATION.
6. ALL DUCTWORK PASSING THRU' RATED CORRIDORS SHALL BE MIN. 26 GAGE SHEET METAL.
7. CONTRACTOR SHALL PROVIDE SHOP DRAWINGS WITHIN 45 DAYS OF AWARD OF CONTRACT. IF SHOP DRAWINGS ARE NOT PROVIDED TO THE ENGINEER FOR APPROVAL, AND ANY CONFLICTS OCCUR BETWEEN TRADES, DURING CONSTRUCTION, & ETC. THEN, THE CONTRACTOR SHALL BE RESPONSIBLE AND BEAR ALL COST INCURRED FOR ANY REVISIONS, AT NO ADDITIONAL COST TO THE DISTRICT. THE DISTRICT AND ENGINEER SHALL BE NOTIFIED IMMEDIATELY PRIOR TO FABRICATION AND INSTALLATION OF ANY CONFLICTS BETWEEN TRADES, DURING CONSTRUCTION, & ETC.
8. CONTRACTOR SHALL PROVIDE FIRESTOPPING FOR PIPE AND DUCT PENETRATIONS THRU' RATED WALLS. CONTRACTOR SHALL COORDINATE WITH OTHER TRADES AS NECESSARY PRIOR TO INSTALLATION.
9. CONTRACTOR SHALL CONFIRM FINAL VENT, COMBUSTION, AND REFRIGERANT PIPE SIZING UPON DETERMINATION OF ACTUAL DEVELOPED LENGTH AND PER MFRG. GUIDELINES. ALL PIPE MATERIALS SHALL BE PER MFRG. GUIDELINES.
10. CONTRACTOR SHALL COORDINATE ALL MOUNTING HEIGHTS ABOVE FINISHED FLOOR WITH OTHER TRADES AND RECIEVE FINAL APPROVAL FROM THE ARCHITECT PRIOR TO FABRICATING AND INSTALLING EXPOSED DUCTWORK, EQUIPMENT, REGISTERS, ETC.
11. MECHANICAL CONTRACTOR SHALL COORDINATE ALL DOOR LOUVER AND UNDERCUT LOCATIONS WITH THE APPROPRIATE TRADES PRIOR TO BID.
12. ALL DOOR UNDERCUTS INDICATED ON FLOOR PLAN(S) SHALL BE 3/4" MIN. ABOVE THRESHOLD.
13. BEFORE BIDDING ON THIS WORK, THE CONTRACTOR SHALL MAKE A CAREFUL EXAMINATION OF THE PREMISES, EXISTING EQUIPMENT AND SERVICES. HE SHALL DEFINITELY DETERMINE IN ADVANCE, THE METHODS OF INSTALLING AND CONNECTING THE NEW EQUIPMENT, DUCTWORK, AND PIPING THE MEANS TO BE PROVIDED FOR GETTING THE EQUIPMENT AND MATERIALS INTO PLACE AND SHALL MAKE HIMSELF THOROUGHLY FAMILIAR WITH ALL OF THE REQUIREMENTS OF THE PROJECT. FAILURE TO VISIT THE SITE WILL IN NO WAY RELIEVE THE SUCCESSFUL CONTRACTOR OF THE NECESSITY OF FURNISHING ANY MATERIAL OR PERFORMING ANY WORK THAT MAY BE REQUIRED TO COMPLETE THE WORK IN ACCORDANCE WITH THE DRAWINGS AND SPECIFICATIONS. THIS ADDITIONAL WORK SHALL BE PERFORMED WITHOUT ADDITIONAL COST TO THE OWNER.
14. PATCH AND REPAIR EXISTING SURFACES AS REQUIRED TO FACILITATE DEMOLITION AND/OR PERFORMANCE OF THE NEW WORK. ALL NEW WORK SHALL MATCH IN KIND, QUALITY AND FINISH U.O.N.

PBK
BERKELEY
2600 TENTH STREET, SUITE 700
BERKELEY, CA 94710-2597
510-450-1999 P

HONEYBEE POOL RENOVATION

CITY OF ROHNERT PARK
1170 GOLF COURSE DRIVE
ROHNERT PARK, CA 94928

LICENSED ARCHITECT LOREN GACHEN C-37926 12/31/23 STATE OF CALIFORNIA

REGISTERED PROFESSIONAL ENGINEER VANESSA GARRETT No. M29253 Exp. 6/30/23 MECHANICAL STATE OF CALIFORNIA

CONSULTANT
oed optimum energy design
Consulting Engineers
5515 Doyle Street
Suite 4
Emeryville, CA 94608
Telephone: (510) 837-9182

VANESSA GARRETT P.E. CE84141 DATE
CITY ENGINEER

REVISION SCHEDULE

NO	DATE	BY	DESCRIPTION
1	5/25/2022		AGENCY PLAN REVIEW
2	12/02/2022		AGENCY PLAN REVIEW

DRAWN:	CHECKED:
DATE: 02/25/2022	SCALE:
PROJECT NUMBER: 2010200	

MECHANICAL FLOOR PLAN - DEMO & NEW

DRAWING NUMBER: M2.0

100% CD SUBMITTAL

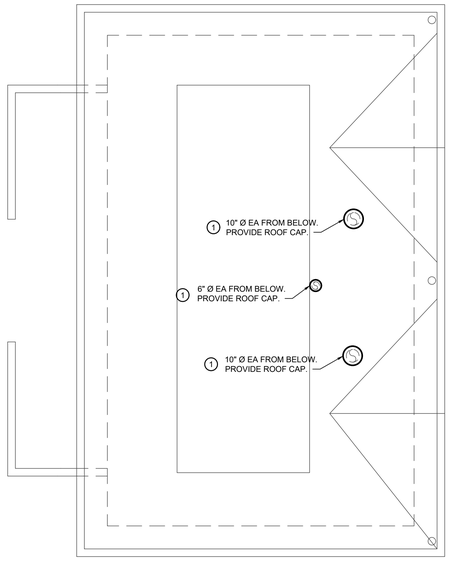

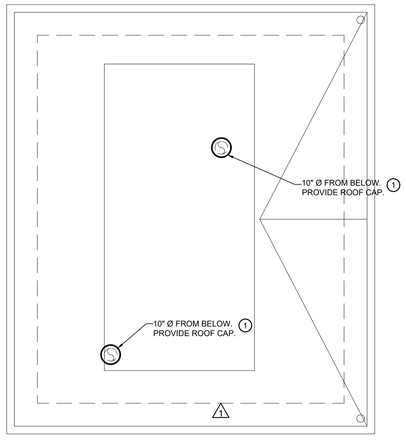

MECHANCIAL - ROOF PLAN

1/4" = 1'-0"

1

NEW CONSTRUCTION GENERAL NOTES

1. FRESH AIR INTAKES SHALL BE 10'-0" MIN. AWAY FROM ALL EXHAUST OUTLETS, PLUMBING VENTS, AND FLUES.
2. VENTS SHALL BE 18 INCH MINIMUM AWAY FROM PARAPET WALLS.
3. PROVIDE IN-FILL AND PATCH WORK TO LARGER, UNUSED WALL & ROOF PENETRATIONS.
4. CONTRACTOR SHALL REUSE EXISTING OPENING(S) IN ROOF FOR FUTURE DUCTWORK AND ETC, WHEREVER POSSIBLE COORDINATE WITH OTHER TRADES AS NECESSARY.
5. PATCH AND REPAIR EXISTING SURFACES AS REQUIRED TO FACILITATE DEMOLITION AND/OR PERFORMANCE OF THE NEW WORK. ALL NEW WORK SHALL MATCH IN KIND, QUALITY AND FINISH U.O.N.

CONSTRUCTION KEYNOTES

1 (N) EXHAUST ROOF CAP.

PBK
BERKELEY
2600 TENTH STREET, SUITE 700
BERKELEY, CA 94710-2597
510-450-1999 P

HONEYBEE POOL RENOVATION

CITY OF ROHNERT PARK
1170 GOLF COURSE DRIVE
ROHNERT PARK, CA 94928

LICENSED ARCHITECT
LOREN GACHEN
C-37926
12/3/23
STATE OF CALIFORNIA

REGISTERED PROFESSIONAL ENGINEER
ABIT BANERJEE
No. M29253
Exp. 6/30/23
MECHANICAL
STATE OF CALIFORNIA

CONSULTANT
optimum energy design
Consulting Engineers
5515 Doyle Street
Suite 4
Emeryville, CA 94608
Telephone: (510) 837-9182

VANESSA GARRETT P.E. CE84141
CITY ENGINEER

DATE

REVISION SCHEDULE

NO	DATE	BY	DESCRIPTION
1	5/25/2022		AGENCY PLAN REVIEW
2	12/02/2022		AGENCY PLAN REVIEW

DRAWN:	CHECKED:
DATE: 02/25/2022	SCALE:
PROJECT NUMBER: 2010200	

MECHANICAL
ROOF PLAN

DRAWING NUMBER: M3.0

100% CD SUBMITTAL

NOT USED — SCALE NONE — 16

NOT USED — SCALE NONE — 12

NOT USED — SCALE NONE — 8

NOT USED — SCALE NONE — 4

NOT USED — SCALE NONE — 15

NOT USED — SCALE NONE — 11

NOT USED — SCALE NONE — 7

DUCT THRU' ROOF DETAIL — SCALE NONE — 3

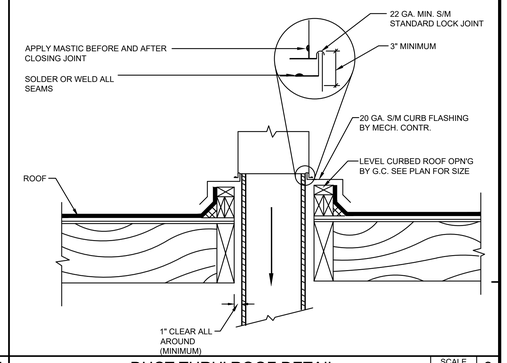

NOT USED — SCALE NONE — 14

NOT USED — SCALE NONE — 10

NOT USED — SCALE NONE — 6

EXHAUST FAN CONTROL — SCALE NONE — 2

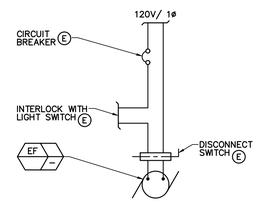

NOT USED — SCALE NONE — 13

NOT USED — SCALE NONE — 9

NOT USED — SCALE NONE — 5

EXHAUST FAN DETAIL — SCALE NONE — 1

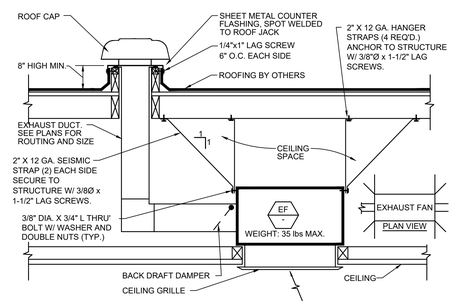

PBK
BERKELEY
2600 TENTH STREET, SUITE 700
BERKELEY, CA 94710-2597
510-450-1999 P

HONEYBEE POOL RENOVATION

CITY OF ROHNERT PARK
1170 GOLF COURSE DRIVE
ROHNERT PARK, CA 94928

LICENSED ARCHITECT — LOREN GACHEN — C—37926 — Exp. 12/31/22 — STATE OF CALIFORNIA

REGISTERED PROFESSIONAL ENGINEER — BANERJEE — No. M29253 — Exp. 6/30/23 — MECHANICAL — STATE OF CALIFORNIA

CONSULTANT
oed optimum energy design
Consulting Engineers
5515 Doyle Street
Suite 4
Emeryville, CA 94608
Telephone: (510) 837-9182

VANESSA GARRETT P.E. CE84141 — DATE
CITY ENGINEER

REVISION SCHEDULE

NO	DATE	BY	DESCRIPTION
1	5/25/2022		AGENCY PLAN REVIEW
2	12/02/2022		AGENCY PLAN REVIEW

DRAWN:	CHECKED:
DATE: 02/25/2022	SCALE:
PROJECT NUMBER: 2010200	

MECHANICAL DETAILS

DRAWING NUMBER: M6.1

100% CD SUBMITTAL

GENERAL NOTES

1. BEFORE COMMENCEMENT OF WORK, THE CONTRACTOR SHALL VERIFY THE EXACT LOCATIONS, ELEVATIONS AND CHARACTERISTICS OF ALL UTILITIES AND PIPING, AND SHALL IMMEDIATELY NOTIFY THE ARCHITECT OF ANY DISCREPANCIES.
2. ALL ACCESSIBLE WATER CLOSETS SHALL HAVE FLUSH VALVE WITH HANDLE ON OPEN SIDE.
3. ALL VALVES, UNIONS, ETC. TO BE SAME SIZE AS PIPE UNLESS OTHERWISE INDICATED ON DRAWINGS.
4. ALL PLUMBING FIXTURE VENTS TO TERMINATE A MINIMUM OF 12 INCHES FROM ANY VERTICAL SURFACE AND 10 FEET FROM ANY OUTSIDE AIR INTAKES.
5. EXACT LOCATIONS AND MOUNTING HEIGHTS OF PLUMBING FIXTURES SHALL BE OBTAINED FROM THE ARCHITECTURAL DRAWINGS.
6. ALL EXTERIOR GAS COCKS, WATER SHUT OFF VALVES AND/OR SEWER CLEANOUTS BELOW GROUND SHALL BE INSTALLED IN YARD BOXES WITH THE COVERS CONSPICUOUSLY MARKED "GAS", "WATER", AND "SEWER" RESPECTIVELY.
7. CONNECTION BETWEEN INCOMPATIBLE MATERIALS ABOVE GRADE AND INSIDE BUILDING SHALL BE MADE WITH TWO (2) DIELECTRIC UNIONS SEPARATED BY A TWELVE INCH (12") SECTION OF RED BRASS PIPE.
8. ALL CLEANOUTS SHALL BE INSTALLED WHERE READILY ACCESSIBLE. THE CONTRACTOR SHALL COORDINATE ALL CLEANOUT LOCATIONS WITH EQUIPMENT, CABINETS, ETC., AND THE ARCHITECT PRIOR TO ANY INSTALLATION.
9. SEE ARCHITECTURAL DRAWINGS FOR ACCESSIBLE FIXTURE LOCATIONS AND MOUNTING HEIGHTS. INSULATE ALL EXPOSED HOT WATER AND DRAIN PIPING BELOW ACCESSIBLE LAVATORIES AND SINKS.
10. ALL PLUMBING WORK SHALL BE INSTALLED SO AS TO AVOID INTERFERENCE WITH ELECTRICAL AND MECHANICAL EQUIPMENT AND STRUCTURAL FRAMING.
11. ALL WORK AND MATERIAL SHALL BE PERFORMED AND INSTALLED IN COMPLIANCE WITH CALIFORNIA PLUMBING CODE 2016.
12. THESE DRAWINGS INDICATE THE SEWER, WATER, AND STORM DRAIN SYSTEMS TO POINT OF CONNECTION 5'-0" OUTSIDE OF THE BUILDING. CONTINUATION OF THESE SYSTEMS IS SHOWN ON THE CIVIL DRAWINGS AND IS SPECIFIED UNDER ANOTHER SECTION OF THE SPECIFICATIONS. THE PIPING SHALL BE INSTALLED TO MEET THE INVERT ELEVATIONS SHOWN ON THE CIVIL DRAWINGS.
13. INSULATION (SEE SPECIFICATION FOR TYPE REQUIRED) AND COVERING ON PIPE AND TUBING SHALL HAVE A FLAME SPREAD RATING NOT TO EXCEED 25 AND A SMOKE DENSITY NOT TO EXCEED 50 WHEN TESTED IN ACCORDANCE WITH 2016 C.B.C. SECTION 720.7.
14. ALL EQUIPMENT SHALL BE LATERALLY SUPPORTED IN ALL DIRECTIONS TO RESIST A MIN. OF 20% OF THE EQUIPMENT'S OPERATING WEIGHT.

PIPE MATERIAL SCHEDULE

NOTE:
ANY (T) PIPING SYSTEM SHALL BE SAME AS (N) OR EQUAL.

SERVICE			MATERIAL: PEX PIPE AND FITTING ASTM 877-2006	ABS DWV - SCH 40	COPPER TYPE L 95/5 SOLDER	BLACK STEEL SCH 40	COPPER TYPE L SILVER SOLDER	CAST IRON SOIL PIPE & FITTING	BLACK STL SCH40 VICTAULIC COUPLING	GALV STL SCH 40 W/C 1 THREADED DWV FITTING	GALV STL SCH 40 THREADED FITTINGS	SCH 40 PVC W/PROPERATED HOLES	COPPER TYPE "L" DO CLEAN TO ASTM B-819 & NFPA 99, CSA 0.4.1 SILVER SOLDER DOUBLE WALL BELL GRIDDE	DUCTILE IRON THRUST BLOCKS	COPPER TYPE A-CR "L" TO ASTM B-88, B-280 SILVER SOLDER	REMARKS
WATER	(CW) (HW) (HWR)	INSIDE			●											5 PSI/100 FT. @ 8FSI MAX. VELOCITY
WASTE & VENT	(W) (V)	INSIDE					●									GRAVITY @ 2% SLOPE

PLUMBING SHEET LIST

Sheet Number	Sheet Title
P0.1	PLUMBING NOTES AND LEGEND
PD2.0	PLUMBING DEMO FLOOR PLAN
P2.0	PLUMBING PROPOSED FLOOR PLANS
P6.0	PLUMBING DETAILS

PLUMBING FIXTURE SCHEDULE

ITEM	FIXTURE	ROUGH-IN CONNECTIONS: TRAP	WASTE	VENT	HOT WATER	COLD WATER	GAS	DESCRIPTION
WC 1	WATER CLOSET	INT	4"	2"	--	1"	--	AMERICAN STANDARD (A/S) NO. 3351.001 "AFWALL ELONGATED FLUSH VALVE TOILET", SIPHON JET, WALL HUNG, ELONGATED BOWL, TOP SPUD. COMPLETE WITH SLOAN ROYAL NO. 111-1.28 GPF FLUSH VALVE, OLSONITE NO. 95CC-SS SEAT AND ZURN NO. Z1203 & Z1204 SERIES CARRIER.
WC 2	WATER CLOSET (ACCESSIBLE)	INT	4"	2"	--	1"	--	AMERICAN STANDARD (A/S) NO. 3351.001 "AFWALL ELONGATED FLUSH VALVE TOILET", SIPHON JET, WALL HUNG, ELONGATED BOWL, TOP SPUD. COMPLETE WITH SLOAN ROYAL NO. 111-1.28 GPF FLUSH VALVE, OLSONITE NO. 95CC-SS SEAT AND ZURN NO. Z1203 & Z1204 SERIES CARRIER, MOUNT AT ADA ACCESSIBLE HEIGHT.
UR 1	URINAL	INT	2"	1-1/2"	--	3/4"	--	AMERICAN STANDARD (A/S) NO. 6550.005 "ALLBROOK URINAL", WALL HUNG, SIPHON JET. COMPLETE WITH SLOAN ROYAL NO. 186-0.5 GPF FLUSH VALVE AND ZURN NO. Z-1222 WALL HANGER.
L 1	LAVATORY (HW/CW)	1-1/4"	2"	1-1/2"	1/2"	1/2"	-- 1	AMERICAN STANDARD (A/S) NO. 0355.012 "LUCERNE WALL HUNG LAVATORY", 20" X 18", WALL HUNG, COMPLETE WITH CHICAGO NO. 802 SELF CLOSING METERING SINGLE PUSH LEVEL FAUCET WITH 0.5 GPM AERATOR, 4" CENTERS, PROVIDE 131-ABNF THERMOSTATIC MIXING VALVE ASSE 1070 CERTIFIED. McGUIRE NO. 155A 1-1/4" OUTLET "OPEN GRID P.O. PLUG", McGUIRE NO. PW8090NCO 1-1/4" L.A. PATTERN P-TRAP WITH GALVANIZED NIPPLE AND CHROMIUM PLATED BRASS CASING, CHICAGO NO. 1017-ABCP LOOSE KEY STOPS WITH RIGID SUPPLIES, AND ZURN NO. Z-1231 CARRIER WITH STEEL PLATE. 1
SH 1	SHOWER (ADA)	--	--	--	3/4"	3/4"	-- 1	SYMMONS NO. C-96-1-295-X "TEMPTROL SHOWER SYSTEM", COMPLETE WITH PRESSURE BALANCING MIXING VALVE WITH LEVER HANDLE, INTEGRAL STOPS, #4-295-B-1.5 GPM ALL BRASS ADJUSTABLE SPRAY AND NOZZLE-TYPE HEAD WITH BACK PLATE.
DF 1	DRINKING FOUNTAIN (ACCESSIBLE, PEDESTAL)	1-1/2"	2"	1-1/2"	--	3/4"	--	HAWS NO. 3500, PEDESTAL MOUNTED, TWO-BUBBLER, BARRIER FREE, REINFORCED CAST CONCRETE WITH EXPOSED AGGREGATE, STAINLESS STEEL RECEPTORS, VANDAL-PROOF BUBBLERS, PUSH BUTTON VALVES AND STAINLESS STEEL ACCESS PLATES, COMPLETE WITH HAWS NO. 6625 MATCHING CONCRETE BOX AND NO. 6620 MATCHING CONCRETE STEP, 10" HIGH. INSTALL WITH 30" SQUARE X 6" THICK CONCRETE SLAB PER MANUFACTURER'S RECOMMENDATION.
FD 1	FLOOR DRAIN	2"	2"	1-1/2"	--	--	--	ZURN NO. ZN-415-B-P, CAST IRON BODY, COMPLETE WITH ROUND NICKEL-BRONZE TOP, CLAMPING COLLAR, 1/2" TRAP PRIMER CONNECTION AND P-TRAP.
FD 2	FLOOR DRAIN (SHOWER)	2"	2"	1-1/2"	--	--	--	ZURN NO. ZN-415-B-113, CAST IRON BODY, COMPLETE WITH ROUND NICKEL-BRONZE TOP, CLAMPING COLLAR, AND P-TRAP.
TP 1	TRAP PRIMER (SINGLE DRAIN)	--	--	--	--	1/2"	--	MIFAB NO. MR-500 TRAP PRIMER VALVE, BRASS BODY, ADJUSTABLE, COMPLETE WITH 1/2" COPPER TYPE "L" PIPE TO RECEPTOR. INSTALL PER MANUFACTURER'S RECOMMENDATIONS, COMPLETE BEHIND ACCESS PANEL WITH SHUT-OFF VALVE.
TP 2	TRAP PRIMER (MULTIPLE DRAIN)	--	--	--	--	1/2"	--	MIFAB NO. MR-500 TRAP PRIMER VALVE, BRASS BODY, ADJUSTABLE, COMPLETE WITH MI-DU DISTRIBUTION UNIT. 1/2" COPPER TYPE "L" PIPE TO EACH RECEPTOR. INSTALL PER MANUFACTURER'S RECOMMENDATIONS, COMPLETE BEHIND ACCESS PANEL WITH SHUT-OFF VALVE.
SH 2	SHOWER	--	--	--	--	3/4" TW	--	SYMMONS NO. 3-325 "SHOWEROFF" SINGLE-TEMPERATURE METERED SHOWER SYSTEM, COMPLETE WITH METERING VALVE, INTEGRAL STOPS AND #4-295-B-1.5 GPM ALL BRASS ADJUSTABLE SPRAY, NOZZLE-TYPE HEAD WITH BACK PLATE. VANDAL RESISTANT.
S 1	SINK (FACULTY, SINGLE BOWL, ACCESSIBLE, HW/CW, DISPOSER)	1-1/2"	2"	1-1/2"	1/2"	1/2"	--	ELKAY NO. LRAD221955 "LUSTERTONE SINGLE BOWL", SINGLE COMPARTMENT, 18 GAUGE TYPE 304 STAINLESS STEEL, SELF-RIMMING, 22" X 19" X 5-1/2" DEEP. COMPLETE WITH CHICAGO NO. 2304-E35ABCP FAUCET WITH 1.5 GPM AERATOR, INSINKERATOR "BADGER 1" FOOD WASTE DISPOSER, 1/3 H.P./120V/6.7 AMP AVG., McGUIRE NO. PW8080BNCO 1-1/2" L.A. PATTERN P-TRAP WITH TRAP AND SUPPLY COVERS, GALVANIZED NIPPLE AND CHROMIUM PLATED BRASS CASING, AND CHICAGO NO. 1017-ABCP LOOSE KEY STOPS WITH RIGID SUPPLIES. MOUNT IN ACCORDANCE WITH ADA REQUIREMENTS.
HB 1	HOSE BIBB	--	--	--	--	3/4"	--	ACORN #8121-CP-LF HOSE BIBB WITH VACUUM BREAKER. PROVIDE #8211 ACCESS PANEL WITH LOCKING DOOR AND COVER. 3
JS 1	JANITORS SINK	3"	3"	2"	1/2"	1/2"	--	AMERICAN STANDARD #7745.811 CORNER SERVICE SINK", ENAMELED CAST IRON, CORNER FLOOR MOUNTED, VINYL RIM GUARD, 3" DIAMETER DRAIN WITH FLAT CHROME STRAINER. CHICAGO NO. 897-CCP WALL MOUNTED FAUCET W/ VACUUM BREAKER.

FIXTURE UNITS

NUMBER	TYPE OF FIXTURE	CW FU PER FIXTURE	TOTAL CW FU UNITS	WASTE FU PER FIXTURE	TOTAL WASTE FU UNITS
1	DRINKING FOUNTAIN	0.5	0.5	0.5	0.5
-	HOSE BIBBS	-	-	-	-
-	ADD HOSE BIBBS	-	-	-	-
4	LAVATORY	1	4	1	4
1	CONCESSION SINK	1.5	1.5	2	2
2	URINALS	20	40	2	4
5	WATER CLOSETS	2.5	12.5	4	20
6	FLOOR DRAIN	-	-	2	12
TOTAL FIXTURE UNITS			58.5		42.5

GAS WATER HEATER SCHEDULE

ITEM	MANUFACTURER	MODEL NO.	SERVICE	LOCATION	STORAGE	RECOVERY CAPACITY @ 90°F	INLET TEMP °F	OUTLET TEMPER °F	GAS INPUT BTU/HR	EFFICIENCY (UEF)	OPER. WT. LBS.	REMARKS
WH 1	A.O. SMITH	GUC-30	DOMESTIC HOT WATER	GARAGE	29 GAL.	34	62°	120°	33,000	0.59	126	MUST HAVE ASHRAE STICKER OR OTHERWISE COMPLY WITH TITLE 24 REQUIREMENT FOR SERVICE WATER HEATERS. SEE DETAIL 1/P-6.0.

LEGEND

SYMBOL	ABBREVIATION	DESCRIPTION
	S OR W	SOIL OR WASTE ABOVE FLOOR
	S OR W	SOIL OR WASTE BELOW FLOOR OR GRADE
CWV	CWV	COMBINATION WASTE & VENT BELOW FLOOR OR GRADE
SD	SD	STORM DRAIN ABOVE FLOOR
SD	SD	STORM DRAIN BELOW FLOOR OR GRADE
OD	OD	OVERFLOW DRAIN ABOVE FLOOR
OD	OD	OVERFLOW DRAIN BELOW FLOOR OR GRADE
	V	SANITARY VENT
	CW	COLD WATER
	HW	HOT WATER
	HWR	HOT WATER RETURN
CD	CD	CONDENSATE DRAIN
OCD	OCD	OVERFLOW CONDENSATE DRAIN
TP	TP	TRAP PRIMER
		DIRECTION OF FLOW
	SOV	SHUT-OFF VALVE
	SOV/GC	SHUT-OFF VALVE OR GAS COCK IN YARD BOX
	GC	GAS COCK
	BV	BALANCING VALVE
	FCO	FLOOR CLEANOUT
	WCO	WALL CLEANOUT
		RISER UP
		RISER DOWN
	ABV	ABOVE
	AP	ACCESS PANEL
	BEL	BELOW
	CLG	CEILING
	CONT	CONTINUATION
	COTG	CLEANOUT TO GRADE
	DN	DOWN
	FLR	FLOOR
	FFE	FINISH FLOOR ELEVATION
	I.E.	INVERT ELEVATION
	POC	POINT OF CONNECTION
	PLCS	PLACES
	SLVE	SLEEVE
	VTR	VENT THRU ROOF
	YB	YARD BOX

APPLICABLE CODES

BUILDING OCCUPANCY CLASSIFICATION:

THE CONSTRUCTION OF THIS PROJECT SHALL CONFORM TO THE REQUIREMENTS OF:

	CODE
2019	California Building Standards Administrative Code PART 1, TITLE 24, CALIFORNIA CODE OF REGULATIONS (CCR)
2019	California Building Code PART 2, TITLE 24, CCR
2019	California Electrical Code PART 3, TITLE 24, CCR
2019	California Mechanical Code PART 4, TITLE 24, CCR
2019	California Plumbing Code PART 5, TITLE 24, CCR
2019	California Energy Code PART 6, TITLE 24, CCR
2019	California Fire Code PART 9, TITLE 24, CCR
2019	California Green Building Standard Code (CALGreen), Part II, Title 24 C.C.R.
2019	California Referenced Standards, Part 12, Title 24 C.C.R. Title 18 C.C.R., Public Safety, State Fire Marshal Regulations.

MEP COMPONENT ANCHORAGE NOTE

ALL MECHANICAL, PLUMBING, AND ELECTRICAL COMPONENTS SHALL BE ANCHORED AND INSTALLED PER THE DETAILS ON THE APPROVED CONSTRUCTION DOCUMENTS. WHERE NO DETAIL IS INDICATED, THE FOLLOWING COMPONENTS SHALL BE ANCHORED OR BRACED TO MEET THE FORCE AND DISPLACEMENT REQUIREMENTS PRESCRIBED IN THE 2019 CBC.

1. ALL PERMANENT EQUIPMENT AND COMPONENTS.
2. TEMPORARY OR MOVABLE EQUIPMENT THAT IS PERMANENTLY ATTACHED (E.G. HARD WIRED) TO THE BUILDING UTILITY SERVICES SUCH AS ELECTRICITY, GAS OR WATER.
3. MOVABLE EQUIPMENT WHICH IS STATIONED IN ONE PLACE FOR MORE THAN 8 HOURS AND HEAVIER THAN 400 POUNDS ARE REQUIRED TO BE ANCHORED WITH TEMPORARY ATTACHMENTS.

THE ATTACHMENT OF THE FOLLOWING MECHANICAL AND ELECTRICAL COMPONENTS SHALL BE POSITIVELY ATTACHED TO THE STRUCTURE. BUT NEED NOT BE DETAILED ON THE PLANS. THESE COMPONENTS SHALL HAVE FLEXIBLE CONNECTIONS PROVIDED BETWEEN THE COMPONENT AND ASSOCIATED DUCTWORK, PIPING, AND CONDUIT.

A. COMPONENTS WEIGHING LESS THAN 400 POUNDS AND HAVE A CENTER OF MASS LOCATED 4 FEET OR LESS ABOVE THE ADJACENT FLOOR OR ROOF LEVEL THAT DIRECTLY SUPPORT THE COMPONENT.
B. COMPONENTS WEIGHING LESS THAN 20 POUNDS, OR IN THE CASE OF DISTRIBUTED SYSTEMS, LESS THAN 5 POUNDS PER FOOT, WHICH ARE SUSPENDED FROM A ROOF OR FLOOR OR HUNG FROM A WALL.

FOR THOSE ELEMENTS THAT DO NOT REQUIRE DETAILS ON THE APPROVED DRAWINGS, THE INSTALLATION SHALL BE SUBJECT TO THE APPROVAL OF THE STRUCTURAL ENGINEER OF RECORD. THE PROJECT INSPECTOR WILL VERIFY THAT ALL COMPONENTS AND EQUIPMENT HAVE BEEN ANCHORED IN ACCORDANCE WITH THE ABOVE REQUIREMENTS.

PBK
BERKELEY
2600 TENTH STREET, SUITE 700
BERKELEY, CA 94710-2597
510-450-1999 P

HONEYBEE POOL RENOVATION

CITY OF ROHNERT PARK
1170 GOLF COURSE DRIVE
ROHNERT PARK, CA 94928

LICENSED ARCHITECT LOREN GACHEN C-37926 10/3/22 STATE OF CALIFORNIA

REGISTERED PROFESSIONAL ENGINEER ABIY BAKERUE No. M29253 Exp. 6/30/23 MECHANICAL STATE OF CALIFORNIA

CONSULTANT
qed optimum energy design
Consulting Engineers
5515 Doyle Street
Suite 4
Emeryville, CA 94608
Telephone: (510) 837-9182

VANESSA GARRETT P.E. CE84141 — DATE
CITY ENGINEER

REVISION SCHEDULE

NO	DATE	BY	DESCRIPTION
1	5/25/2022		AGENCY PLAN REVIEW
2	12/02/2022		AGENCY PLAN REVIEW
3	03-01-23		ADDENDUM 1

DRAWN: | CHECKED:
DATE: 02/25/2022 | SCALE:
PROJECT NUMBER: 2010200

PLUMBING NOTES AND LEGEND

DRAWING NUMBER: P0.1

100% CD SUBMITTAL

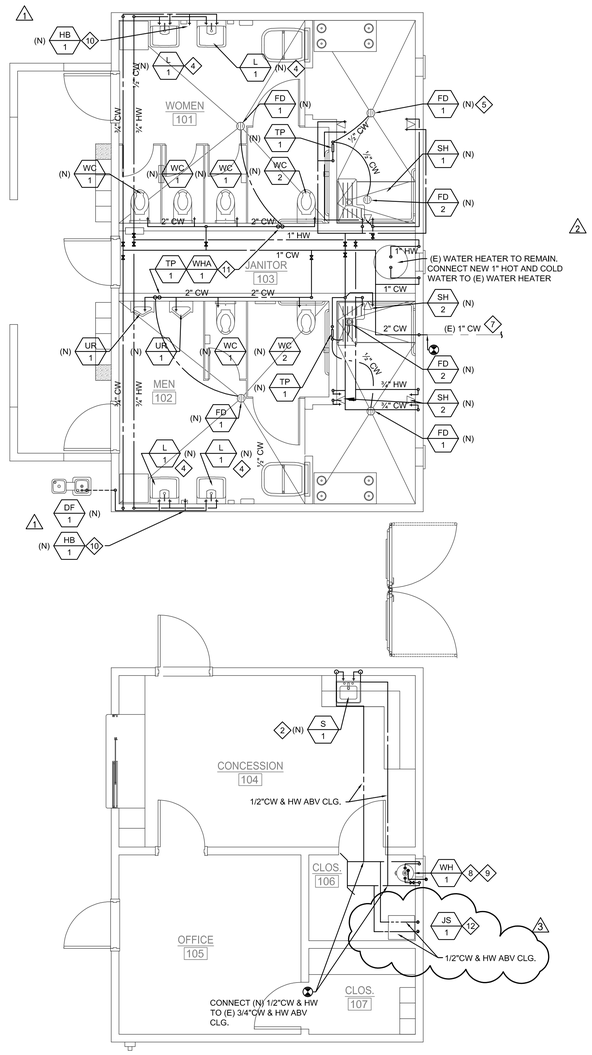

PLUMBING PROPOSED CONCESSION/TOILET FLOOR PLAN - WATER AND GAS | ¼" = 1'-0" | 2

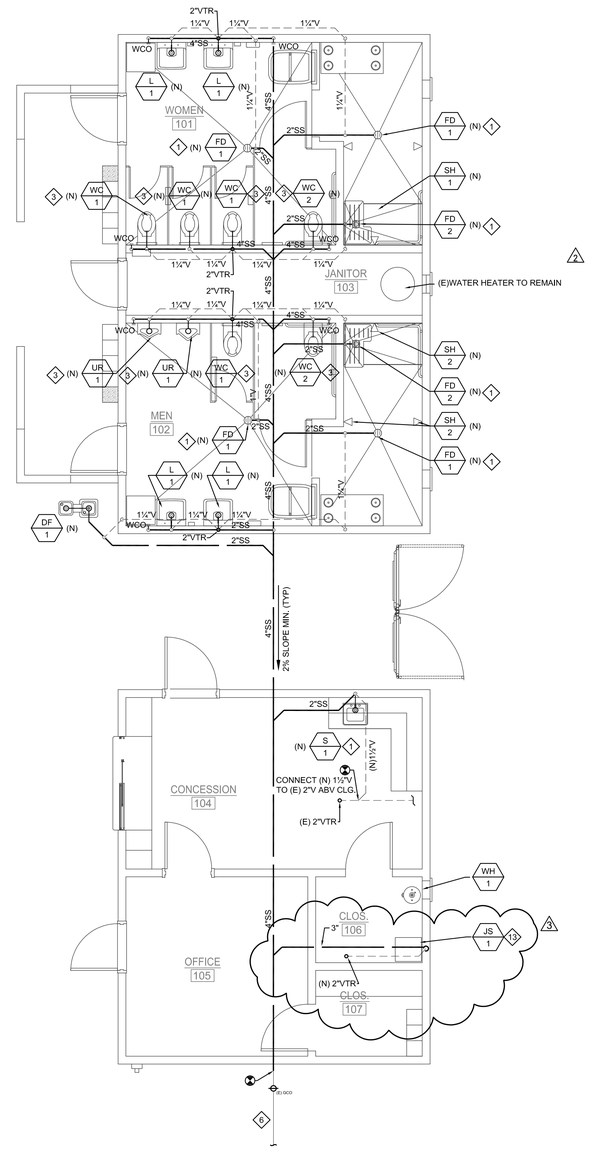

PLUMBING PROPOSED CONCESSION/TOILET FLOOR PLAN - WASTE AND VENT | ¼" = 1'-0" | 1

NEW CONSTRUCTION GENERAL NOTES

1. FOR CONTINUATION OF ALL UTILITIES SEE CIVIL ENGINEERING DRAWINGS.
2. ALL SLEEVES THRU FOOTINGS SHALL BE MINIMUM TWO PIPE SIZES LARGER THAN THE PIPE GOING THRU IT, PROVIDE ALL SLEEVES.
3. ALL STORM DRAIN LINES, WASTE LINES & COLD WATER LINES INTO FOOTINGS SHALL BE DOUBLE HALF LAP WRAPPED WITH 1/8" THICK "ARMOFLEX" INSULATION. ALSO, THE CONTRACTOR SHALL PROVIDE BLOCKED OUT AREAS IN THE FOOTING FOR STORM DRAIN LINES, WASTE LINES & COLD WATER LINES. ALL PIPING SHALL AVOID THE LOWER 9" OF THE FOOTING.
4. BEFORE COMMENCEMENT OF WORK, THE CONTRACTOR SHALL VERIFY THE EXACT LOCATIONS, ELEVATIONS AND CHARACTERISTICS OF ALL UTILITIES AND PIPING BY PHYSICAL EXCAVATION, AND SHALL IMMEDIATELY NOTIFY THE ARCHITECT OF ANY DISCREPANCIES.
5. THE CONTRACTOR SHALL FIELD VERIFY ALL EXISTING UTILITIES AND POINTS OF CONNECTION PRIOR TO BIDDING PROJECT.
6. WHERE PLANS INDICATE NEW FIXTURES OR EQUIPMENT CONNECTING TO EXISTING SERVICES, PLUMBING CONTRACTOR SHALL MODIFY AND/OR EXTEND EXISTING PIPING OR ROUGH-INS AS REQUIRED TO SUIT THE NEW FIXTURE.
7. CONTRACTOR SHALL COORDINATE EXACT ROUGH-IN LOCATIONS WITH ALL EQUIPMENT INSTALLATION INSTRUCTIONS.

CONSTRUCTION KEYNOTES

1. PROVIDE NEW 2" SS W/ 1½" VENT, CONNECT TO NEAREST EXISTING SANITARY SEWER AND VENT IN WALL.
2. PROVIDE NEW ½" HW & CW TO SINK, CONNECT TO NEAREST EXISTING HWS AND CWS IN WALL.
3. PROVIDE NEW 3" SS W/ 2" VENT, CONNECT TO NEAREST EXISTING SANITARY SEWER AND VENT IN WALL.
4. PROVIDE NEW ¾" HW AND CW TO LAVATORY, CONNECT TO NEAREST EXISTING HWS AND CWS IN WALL.
5. FULLY SERVICE EXISTING FLOOR DRAIN AND ASSOCIATED TRAP PRIMER. PROVIDE ALLOWANCE FOR REPAIRING/REPLACING FIXTURE AND ASSOCIATED TRAP PRIMER. ADJUST FIXTURE TO NEW FINISHED FLOOR ELEVATION.
6. CONNECT TO EXISTING SANITARY SEWER. CONTRACTOR TO FIELD VERIFY PIPE SIZE AND LOCATION.
7. CONNECT TO EXISTING CW SUPPLY. CONTRACTOR TO FIELD VERIFY PIPE SIZE AND LOCATION.
8. WATER HEATER CONNECT TO FLUE UP THRU ROOF. REFER TO DETAIL: 7/P6.0
9. WATER HEATER CONNECT TO BE SEISMIC STRAP TO WALL. FOR WATER HEATER MOUNTING, REFER TO DETAIL: 1/P6.0
10. PROVIDE NEW HOSE BIBB W/ VACUUM BREAKER +18" ABV FINISH FLOOR
11. PROVIDE NEW TRAP PRIMER AND WATER HAMMER ARRESTOR ON 2"CW HEADER IN WALL WITH ACCESS PANEL.
12. FURNISH AND INSTALL NEW JANITORS SINK. R,I&C NEW 1/2" CW &HW AS REQUIRED.
13. FURNISH AND INSTALL NEW JANITORS SINK. R,I&C NEW 3" SEWER BELOW FLOOR AND 2"VTR. PROVIDE 3"WCO

PBK
BERKELEY
2600 TENTH STREET, SUITE 700
BERKELEY, CA 94710-2597
510-450-1999 P

HONEYBEE POOL RENOVATION

CITY OF ROHNERT PARK
1170 GOLF COURSE DRIVE
ROHNERT PARK, CA 94928

LICENSED ARCHITECT — LOREN GACHEN, C-37926, Date 12/31/23, STATE OF CALIFORNIA
REGISTERED PROFESSIONAL ENGINEER — JERRY BANKERT, No. M29253, Exp. 6/30/23, MECHANICAL, STATE OF CALIFORNIA

CONSULTANT
oed optimum energy design
Consulting Engineers
5515 Doyle Street
Suite 4
Emeryville, CA 94608
Telephone: (510) 837-9182

VANESSA GARRETT P.E. CE84141 — DATE
CITY ENGINEER

REVISION SCHEDULE

NO	DATE	BY	DESCRIPTION
1	5/25/2022		AGENCY PLAN REVIEW
2	12/02/2022		AGENCY PLAN REVIEW
3	03-01-23		ADDENDUM 1

DRAWN: | CHECKED:
DATE: 02/25/2022 | SCALE:
PROJECT NUMBER: 2010200

PLUMBING PROPOSED FLOOR PLANS

DRAWING NUMBER: P2.0

100% CD SUBMITTAL

STATE OF CALIFORNIA
Domestic Water Heating System
NRCC-PLB-E
CALIFORNIA ENERGY COMMISSION

CERTIFICATE OF COMPLIANCE			NRCC-PLB-E
Project Name:	HoneyBee Pool Renovations	Report Page:	(Page 1 of 6)
Project Address:	1170 Golf Course Drive, Rohnart Park CA 94928	Date Prepared:	2022-05-18T18:16:05-04:00

This document is used to demonstrate compliance for nonresidential occupancies with requirements in §110.1, §110.3, §120.3, and §140.5, and with requirements in §141.0 for additions and alterations, for domestic water heating scopes using the prescriptive path. For high-rise residential and hotel/motel occupancies compliance is demonstrated with requirements in §110.1, §110.3, §120.3, §150.0 and §150.1(c)8, and with requirements §150.2 for additions.

A. GENERAL INFORMATION

01	Project Location (city)	Rohnert Park	02 Climate Zone	2
03	Occupancy Types Within Project (select all that apply):			
☒ Nonresidential	☐ High-Rise Residential	☐ Hotel/Motel		
☐ State Building	☐ Healthcare Facility	☒ Other (Write In)		Community Pool Building

B. PROJECT SCOPE

This table includes domestic water heating systems that are within the scope of the permit application and are demonstrating compliance using the prescriptive paths outlined in §140.5, §150.1(c)8, and §141.0(a), or §141.0(b)2N for additions or alterations. Solar water heating systems are documented on the NRCC-SRA compliance document. Combined hydronic water heating systems are documented on the NRCC-MCH compliance document.

01	02	03		
My project consists of (check all that apply):	System Type[1,2]	System Components		
☐ New system (DHW system being installed for the first time in newly constructed building)		☐ Equipment	☐ Distribution	☐ Controls
☒ System Alteration (equipment, distribution or controls)	Central System (serving nonresidential spaces)	☒ Equipment	☒ Distribution	☐ Controls
☒ System Alteration (equipment, distribution or controls)	Central System (serving nonresidential spaces)	☒ Equipment	☒ Distribution	☐ Controls
☒ System Alteration (equipment, distribution or controls)	Central System (serving nonresidential spaces)	☒ Equipment	☒ Distribution	☐ Controls

[1]*FOOTNOTES: Point of use water heaters, or other non-central systems used to serve nonresidential spaces, are considered individual systems.*
[2] *Dwelling units refers to hotel/motel guest rooms and units in a high-rise residential occupancy.*

Registration Number: Registration Date/Time: Registration Provider: Energy Code Ace
CA Building Energy Efficiency Standards - 2019 Nonresidential Compliance Report Version: 2019.1.003 Schema Version: rev 20200601 Report Generated: 2022-05-18 15:16:22

STATE OF CALIFORNIA
Domestic Water Heating System
NRCC-PLB-E
CALIFORNIA ENERGY COMMISSION

CERTIFICATE OF COMPLIANCE			NRCC-PLB-E
Project Name:	HoneyBee Pool Renovations	Report Page:	(Page 2 of 6)
Project Address:	1170 Golf Course Drive, Rohnart Park CA 94928	Date Prepared:	2022-05-18T18:16:05-04:00

C. COMPLIANCE RESULTS

Table C will indicate if the project data input into the compliance document is compliant with water heating requirements. If this table says "DOES NOT COMPLY" or "COMPLIES with Exceptional Conditions" refer to Table D. or the table indicated as not compliant for guidance.

01	02	03	04
Domestic Hot Water Equipment	Distribution Systems	Controls	**Compliance Results**
Table F	Table G	Table H	
Yes	Yes		COMPLIES

D. EXCEPTIONAL CONDITIONS
This table is auto-filled with uneditable comments because of selections made or data entered in tables throughout the form.

E. ADDITIONAL REMARKS
This table is includes remarks made by the permit applicant to the Authority Having Jurisdiction.

Registration Number: Registration Date/Time: Registration Provider: Energy Code Ace
CA Building Energy Efficiency Standards - 2019 Nonresidential Compliance Report Version: 2019.1.003 Schema Version: rev 20200601 Report Generated: 2022-05-18 15:16:22

STATE OF CALIFORNIA
Domestic Water Heating System
NRCC-PLB-E
CALIFORNIA ENERGY COMMISSION

CERTIFICATE OF COMPLIANCE			NRCC-PLB-E
Project Name:	HoneyBee Pool Renovations	Report Page:	(Page 3 of 6)
Project Address:	1170 Golf Course Drive, Rohnart Park CA 94928	Date Prepared:	2022-05-18T18:16:05-04:00

F. DOMESTIC HOT WATER EQUIPMENT

This table is used to demonstrate compliance with mandatory equipment requirements in §110.1 and §110.3. For high-rise residential and hotel/motel occupancies, compliance with prescriptive requirements in §150.1(c)8 must also be demonstrated and with §150.2 for addition and alteration scopes.

Equipment Schedule: Central Systems

07	08	09	10	11	12	13	14	15
Name or Item Tag	Equipment Type	Volume (gal)	Rated Input Capacity (Btu/h)	Rated Efficiency (%)	Minimum Efficiency Required (%)	Efficiency Unit	Designed Standby Loss[1]	Maximum Standby Loss[1]
WH-1	Gas Storage Water Heater	30	33,000	0.85	0.8	Et	1,689	1,691.25

[1]*FOOTNOTE: For gas water heaters/boilers, standby loss is in BTUH. for electric storage water heaters, standby loss is in %/hr.*

Water Heating Equipment All Occupancies

	Yes	No	Not Applicable	Requirement
18	☒	☐	☐	Unfired storage tank insulation shall have Internal + External >=R-16 OR External >=R-12. Label required per §110.3(c)3
19	☐	☐	☒	New state buildings 60% of energy for service water heating from site solar energy or recovered energy per §110.3(c)5
20	☐	☐	☒	Isolation valves for instantaneous water heater with input rating >6.8 kBTUH or 2 kW has been specified per §110.3(c)6

Registration Number: Registration Date/Time: Registration Provider: Energy Code Ace
CA Building Energy Efficiency Standards - 2019 Nonresidential Compliance Report Version: 2019.1.003 Schema Version: rev 20200601 Report Generated: 2022-05-18 15:16:22

STATE OF CALIFORNIA
Domestic Water Heating System
NRCC-PLB-E
CALIFORNIA ENERGY COMMISSION

CERTIFICATE OF COMPLIANCE			NRCC-PLB-E
Project Name:	HoneyBee Pool Renovations	Report Page:	(Page 4 of 6)
Project Address:	1170 Golf Course Drive, Rohnart Park CA 94928	Date Prepared:	2022-05-18T18:16:05-04:00

G. DOMESTIC HOT WATER DISTRIBUTION SYSTEM

This table is used to demonstrate compliance for nonresidential occupancies with distribution requirements in §120.3 and §140.5. For high-rise residential and hotel/motel occupancies, compliance is demonstrated with requirements §110.3(c), §120.3, §150.0, §150.1

Recirculation Loops in Central Systems Serving Dwelling Units or Nonresidential Spaces

	Yes	No	Not Applicable	Requirement
01	○	○	●	Air release valve or vertical pump installation per §110.3(c)4A
02	○	○	●	Check valve or similar located between recirculation pump and water heating equipment to prevent backflow per §110.3(c)4B
03	○	○	●	Hose bibb installed between pump and equipment and isolation valve between hose bibb and equipment per §110.3(c)4C
04	○	○	●	Isolation valves on both sides of the pump per §110.3(c)4D
05	○	○	●	Cold water and recirculation loop piping shall not be connected to the hot water storage tank drain port per §110.3(c)4E
06	○	○	●	Check valve installed on cold water supply between hot water system and next closest tee on cold water supply per §110.3(c)4F
07	○	○	●	For central systems serving multiple dwelling units, design includes two or more recirculation loops serving separate dwelling units per §150.1(c)8Bii unless building has <=8 dwelling units.

Mandatory Pipe Insulation All Occupancies

12	☐	For systems serving nonresidential spaces, pipe insulation for the following applications is specified to comply with Table 120.3-A (see below) per §120.3 : • Recirculating system piping, including supply and return piping of the water heater • The first 8 ft of hot and cold outlet piping, including between storage tank and heat trap, for a nonrecirculating storage system • Pipes that are externally heated
13	☒	Insulation shall be protected from damage, including that due to sunlight, moisture, equipment maintenance, and wind. Insulation exposed to weather shall be installed with a cover suitable for outdoor service per §120.3(b) and §150.0(j)3

TABLE 120.3-A PIPE INSULATION THICKNESS

Fluid Temperature Range (°F)	Conductivity Range (Btu-in per hour per ft² per °F)	Insulation Mean Rating Temp (°F)	Nominal Pipe Diameter (in)		
			< 1	1 to < 1.5	1.5 to < 4
			Minimum Insulation Required		
105-140	0.22 - 0.28	100	1.0 in or R-7.7	1.5 in or R-12.5	1.5 in or R-11

H. DOMESTIC HOT WATER CONTROLS
This section does not apply to this project.

Registration Number: Registration Date/Time: Registration Provider: Energy Code Ace
CA Building Energy Efficiency Standards - 2019 Nonresidential Compliance Report Version: 2019.1.003 Schema Version: rev 20200601 Report Generated: 2022-05-18 15:16:22

STATE OF CALIFORNIA
Domestic Water Heating System
NRCC-PLB-E
CALIFORNIA ENERGY COMMISSION

CERTIFICATE OF COMPLIANCE			NRCC-PLB-E
Project Name:	HoneyBee Pool Renovations	Report Page:	(Page 5 of 6)
Project Address:	1170 Golf Course Drive, Rohnart Park CA 94928	Date Prepared:	2022-05-18T18:16:05-04:00

I. DECLARATION OF REQUIRED CERTIFICATES OF INSTALLATION

Selections have been made based on information provided in this document. If any selection have been changed by permit applicant, an explanation should be included in Table E. Additional Remarks. These documents must be provided to the building inspector during construction and can be found online at https://www.energy.ca.gov/title24/2019standards/2019_compliance_documents/Nonresidential_Documents/NRCI/

Form/Title	Field Inspector	
	Pass	Fail
NRCI-PLB-01-E - Must be submitted for all buildings	☐	☐

J.DECLARATION OF REQUIRED CERTIFICATES OF ACCEPTANCE
There are no Certificates of Acceptance applicable to service water heating requirements.

K. DECLARATION OF REQUIRED CERTIFICATES OF VERIFICATION
There are no NRCV forms required for this project.

Registration Number: Registration Date/Time: Registration Provider: Energy Code Ace
CA Building Energy Efficiency Standards - 2019 Nonresidential Compliance Report Version: 2019.1.003 Schema Version: rev 20200601 Report Generated: 2022-05-18 15:16:22

STATE OF CALIFORNIA
Domestic Water Heating System
NRCC-PLB-E
CALIFORNIA ENERGY COMMISSION

CERTIFICATE OF COMPLIANCE			NRCC-PLB-E
Project Name:	HoneyBee Pool Renovations	Report Page:	(Page 6 of 6)
Project Address:	1170 Golf Course Drive, Rohnart Park CA 94928	Date Prepared:	2022-05-18T18:16:05-04:00

DOCUMENTATION AUTHOR'S DECLARATION STATEMENT

I certify that this Certificate of Compliance documentation is accurate and complete.

Documentation Author Name: Herman Andres	Documentation Author Signature: [signature]
Company: Optimum Energy Design	Signature Date: 2022-05-19
Address: 5200 E. La Palma Ave	CEA/ HERS Certification Identification (if applicable):
City/State/Zip: Anaheim CA 92807	Phone: 714-693-2277 x 762

RESPONSIBLE PERSON'S DECLARATION STATEMENT

I certify the following under penalty of perjury, under the laws of the State of California:
1. The information provided on this Certificate of Compliance is true and correct.
2. I am eligible under Division 3 of the Business and Professions Code to accept responsibility for the building design or system design identified on this Certificate of Compliance (responsible designer)
3. The energy features and performance specifications, materials, components, and manufactured devices for the building design or system design identified on this Certificate of Compliance conform to the requirements of Title 24, Part 1 and Part 6 of the California Code of Regulations.
4. The building design features or system design features identified on this Certificate of Compliance are consistent with the information provided on other applicable compliance documents, worksheets, calculations, plans and specifications submitted to the enforcement agency for approval with this building permit application.
5. I will ensure that a completed signed copy of this Certificate of Compliance shall be made available with the building permit(s) issued for the building, and made available to the enforcement agency for all applicable inspections. I understand that a completed signed copy of this Certificate of Compliance is required to be included with the documentation the builder provides to the building owner at occupancy.

Responsible Designer Name: Herman Andres	Responsible Designer Signature: [signature]
Company: Optimum Energy Design	Date Signed: 2022/05/18
Address: 5200 E. La Palma Ave	License: M29253
City/State/Zip: Anaheim CA 92807	Phone: 714-693-2200 x762

Registration Number: Registration Date/Time: Registration Provider: Energy Code Ace
CA Building Energy Efficiency Standards - 2019 Nonresidential Compliance Report Version: 2019.1.003 Schema Version: rev 20200601 Report Generated: 2022-05-18 15:16:22

△1

NOTE:
WATER HEATER FLUE SHALL TERMINATION AS PER UPC SECTION 517.0 MINIMUM 8 FEET FROM THE WALL OR ABOVE THE WALL.

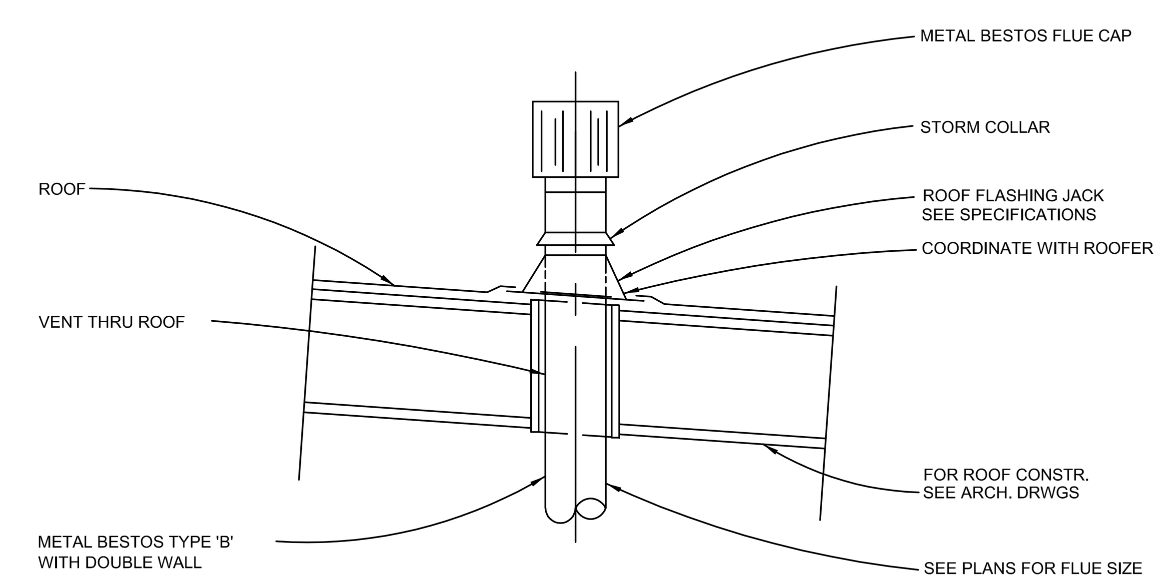

FLUE THRU ROOF DETAIL — SCALE NONE — 6

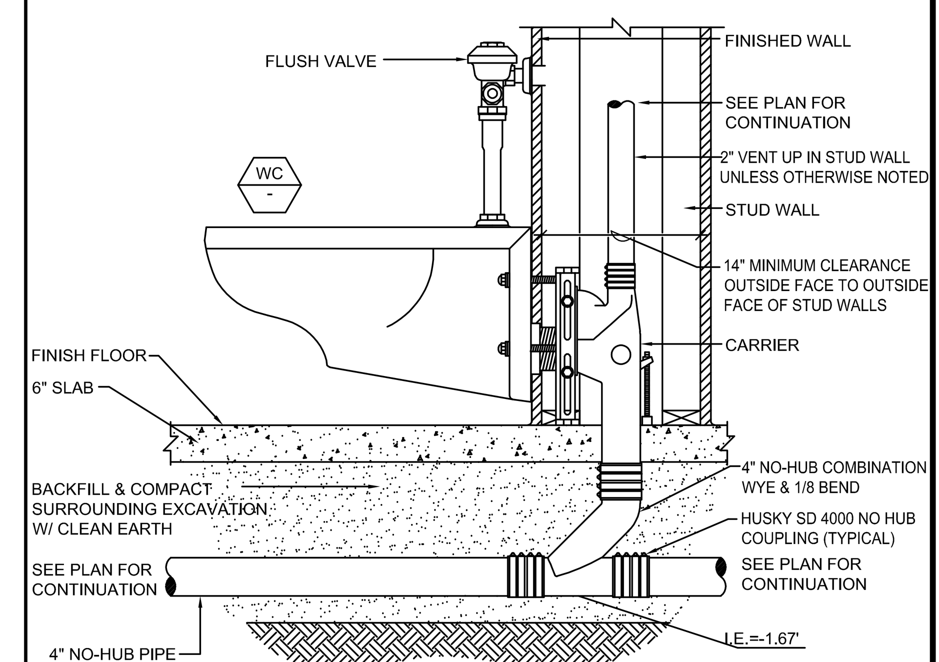

WALL HUNG WATER CLOSET DETAIL — SCALE NONE — 3

NOTES:
1. VENT PIPE SHALL TERMINATE AS PER UPC SECTION 906.0

2. ALL PLIES SET IN BITUMEN. SEE ARCHITECTURAL SPECIFICATION FOR SURFACING.

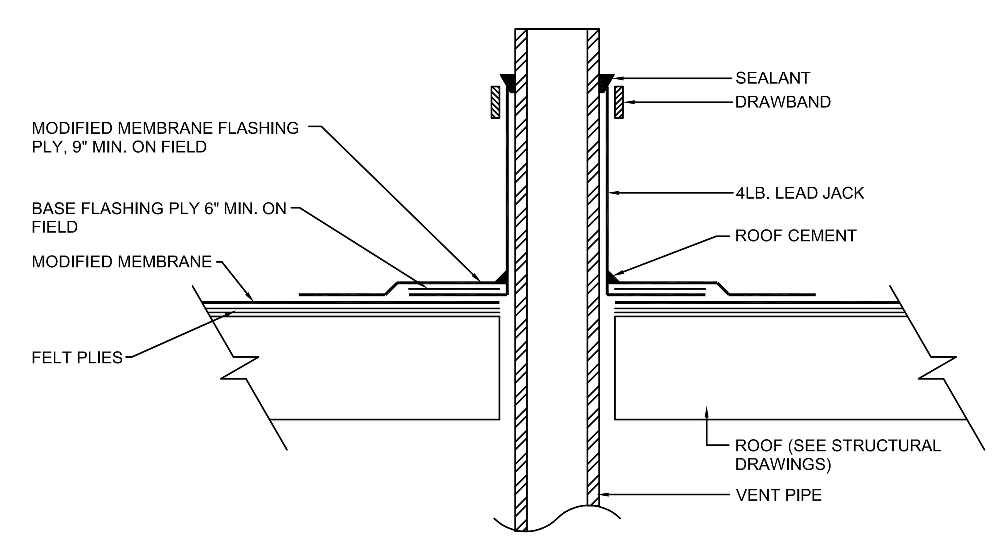

VENT THRU ROOF DETAIL — SCALE NONE — 6

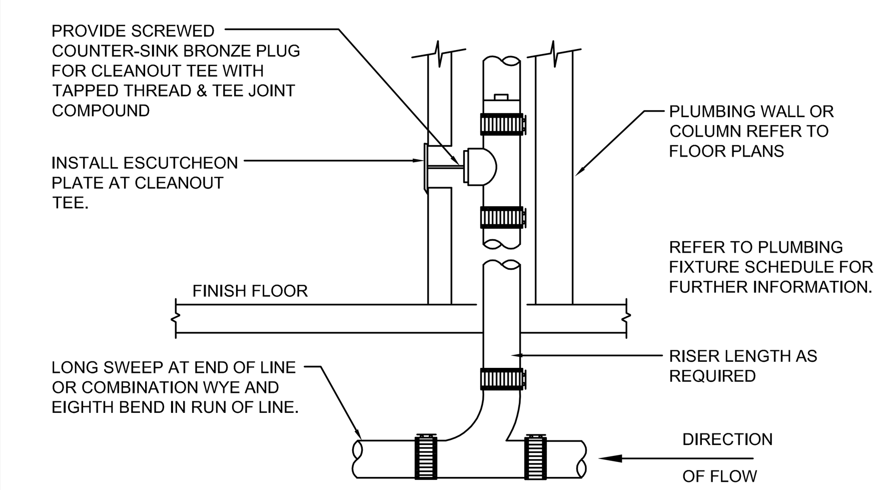

NOTES:
PROVIDE WCO WHERE SHOWN ON PLAN, AND ON SANITARY WASTE BRANCHES NOT SERVED WITH A FLOOR CLEANOUT: LOCATED ABOVE FIXTURE FLOOR RIM WITHIN 4'-0" OF FLOOR. CONSULT LOCAL CODES FOR OTHER WCO REQUIREMENTS.

WALL CLEAN-OUT DETAIL — SCALE NONE — 2

SECTION VIEW A

NOTE:
CPC SECTION NO. 905.2. WHERE VENT PIPE CONNECTS TO HORIZONTAL DRAINAGE PIPE, THE VENT PIPE SHALL HAVE IT'S INVERT TAKEN OFF ABOVE THE DRAINAGE CENTERLINE OF SUCH PIPE DOWNSTREAM OF THE TRAP BEING SERVED.

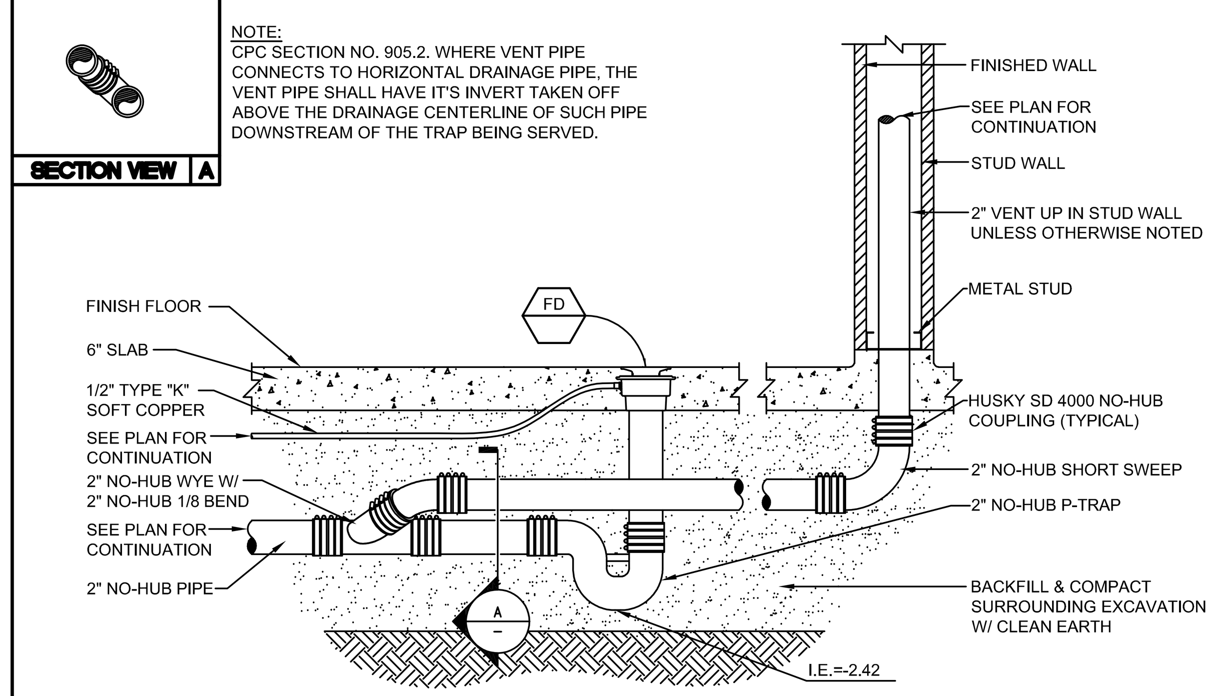

FLOOR DRAIN DETAIL — SCALE NONE — 5

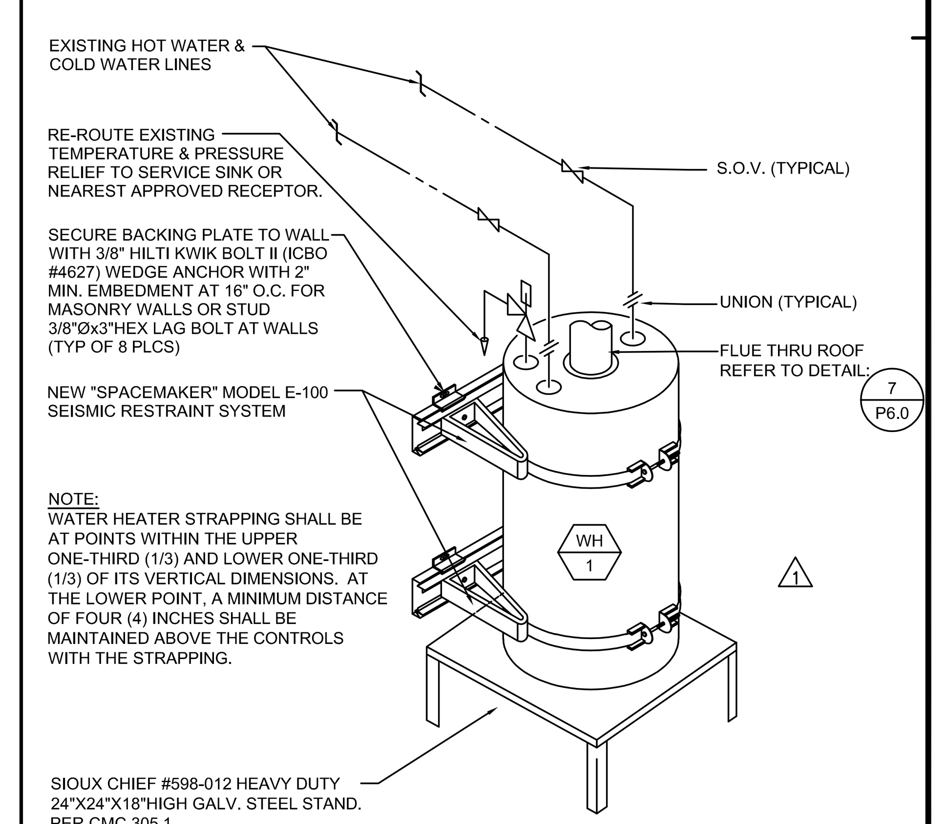

NOTE:
WATER HEATER STRAPPING SHALL BE AT POINTS WITHIN THE UPPER ONE-THIRD (1/3) AND LOWER ONE-THIRD (1/3) OF ITS VERTICAL DIMENSIONS. AT THE LOWER POINT, A MINIMUM DISTANCE OF FOUR (4) INCHES SHALL BE MAINTAINED ABOVE THE CONTROLS WITH THE STRAPPING.

△1

WATER HEATER DETAIL — SCALE NONE — 1

PBK
BERKELEY
2600 TENTH STREET, SUITE 700
BERKELEY, CA 94710-2597
510-450-1999 P

HONEYBEE POOL RENOVATION

CITY OF ROHNERT PARK
1170 GOLF COURSE DRIVE
ROHNERT PARK, CA 94928

LICENSED ARCHITECT — LOREN GACHEN — C-37926 — Ren. Date 12/31/23 — STATE OF CALIFORNIA

REGISTERED PROFESSIONAL ENGINEER — ABBY BANERJEE — No. M29253 — Exp. 6/30/23 — MECHANICAL — STATE OF CALIFORNIA

CONSULTANT
optimum energy design
Consulting Engineers
5515 Doyle Street
Suite 4
Emeryville, CA 94608
Telephone: (510) 837-9182

VANESSA GARRETT P.E. CE84141 — DATE
CITY ENGINEER

REVISION SCHEDULE

NO	DATE	BY	DESCRIPTION
1	5/25/2022		AGENCY PLAN REVIEW
2	12/02/2022		AGENCY PLAN REVIEW

DRAWN:	CHECKED:
DATE: 02/25/2022	SCALE:
PROJECT NUMBER: 2010200	

PLUMBING DETAILS

DRAWING NUMBER: **P6.0**

100% CD SUBMITTAL

GENERAL NOTES

1. THE CONTRACTOR SHALL SECURE AND PAY FOR PERMITS AND FEES NECESSARY FOR EXECUTION AND COMPLETION OF ELECTRICAL WORK, INCLUDING ALL CHARGES BY THE LOCAL GOVERNMENT AGENCIES.
2. ALL OUTLET LOCATIONS SHALL BE COORDINATED WITH ARCHITECTURAL ELEVATIONS PRIOR TO INSTALLATION.
3. THIS CONTRACTOR SHALL SUPPLY POWER TO AND MAKE CONNECTION TO ALL MOTORS AND EQUIPMENT REQUIRING ELECTRICAL CONNECTIONS AS SHOWN ON THE MECHANICAL AND PLUMBING DRAWINGS, INCLUDING ALL FRACTIONAL HORSEPOWER MOTORS. IT SHALL BE THE RESPONSIBILITY OF THE CONTRACTOR TO REVIEW THE MECHANICAL AND PLUMBING DRAWINGS FOR DUCTS, LINES AND EQUIPMENT.
4. SEE SINGLE LINE DIAGRAM FOR CONDUIT AND CONDUCTOR SIZES, PANELS, MECHANICAL EQUIPMENT, ETC. HOMERUNS TO PANELS MAY NOT BE SHOWN ON PLANS BUT ARE A PART OF THIS CONTRACT.
5. UNLESS OTHERWISE NOTED, MOUNTING HEIGHTS INDICATED ON ELECTRICAL OUTLETS ARE FROM FINISHED FLOOR TO CENTER OF OUTLETS.
6. THE CONTRACTOR SHALL BE RESPONSIBLE FOR CUT-OUTS IN TILE OR COUNTER SPLASHES WHERE RECEPTACLES, OUTLETS, ETC., OCCUR.
7. NO CONDUIT SHALL BE RUN HORIZONTALLY IN CONCRETE FLOOR SLABS.
8. ALL WIRING AND ELECTRICAL EQUIPMENT INSTALLED FOR MECHANICAL AND PLUMBING EQUIPMENT SHALL BE IN ACCORDANCE WITH THESE DRAWINGS AND THE WIRING DIAGRAMS OF THE MECHANICAL AND PLUMBING DRAWINGS.
9. ALL FINAL CONNECTIONS TO OWNER-FURNISHED EQUIPMENT SHALL BE MADE BY THE CONTRACTORS.
10. EQUIPMENT ANCHORAGE

    THE SEISMIC ANCHORAGE OF MECHANICAL AND ELECTRICA EQUIPMENT SHALL CONFORM TO ASCE 7-05 CHAPTER 13 AS MODIFIED BY 2016 CBC SECTION 1613.A/1614.A. ANCHORAGE DETAILS FOR ROOF/FLOOR MOUNTED EQUIPMENT SHALL BE SHOWN ON PLAN.
11. THE CONTRACTOR SHALL VISIT THE SITE INCLUDING SPECIFICALLY ALL AREAS INDICATED ON THE DRAWINGS. HE SHALL THOROUGHLY FAMILIARIZE HIMSELF WITH THESE EXISTING CONDITIONS AND BY SUBMITTING A BID ACCEPTS CONDITIONS UNDER WHICH HE WILL BE REQUIRED TO PERFORM HIS WORK.
12. IT SHALL BE THIS CONTRACTOR'S RESPONSIBILITY TO DO ALL CORING, CUTTING, PATCHING AND REFINISHING OF WALLS AND SURFACES WHEREVER IT IS NECESSARY FOR HIM TO PENETRATE FOR HIS WORK. ALL OPENINGS MADE SHALL BE SEALED TO MEET THE RATED INTEGRITY OF THE PARTICULAR WALL, FLOOR OR CEILING.
13. ATTENTION IS CALLED TO THE FACT THAT THE CEILING SYSTEMS FOR THE MOST PART ARE CONSIDERED TO BE INACCESSIBLE. THE CONTRACTOR SHALL STRATEGICALLY LOCATE BOXES, ETC., IN AN ACCESSIBLE CEILING SPACE.
14. WHERE EXPOSED CONDUIT IS PERMITTED BY THE ARCHITECT, SUCH CONDUIT SHALL BE PAINTED TO MATCH FINISH OF SURFACE TO WHICH IT IS ATTACHED/SUPPORTED TO.
15. INSTALL RACEWAY SYSTEMS AS FOLLOWS:
    A. RIGID GALVANIZED STEEL IN ALL OUTDOOR LOCATIONS AND IN INDOOR LOCATIONS WHERE SUBJECT TO PHYSICAL DAMAGE.
    B. I.M.C. OR E.M.T. IN ALL INDOOR AREAS.
    C. FLEXIBLE METAL CONDUIT FOR FINAL CONNECTIONS TO LIGHT FIXTURES, MOTORS, VIBRATING ELECTRICAL EQUIPMENT AND HORIZONTAL RUNS IN WOOD STUD WALLS.
    D. USE COMPRESSION TYPE FITTINGS FOR ALL METALLIC CONDUIT.
    E. USE RIGID CONDUIT FOR ALL EMERGENCY CIRCUITS.
16. CONDUIT ROUTING INDICATED ON THESE PLANS IS DIAGRAMMATIC. ACTUAL ROUTING OF CONDUITS SHALL BE COORDINATED IN THE FIELD TO AVOID INTERFERENCE WITH OTHER UTILITIES AND TRADES. THE CONTRACTOR SHALL INSTALL ALL CONDUIT, JUNCTION/PULL
17. BOXES, ETC., AS REQUIRED FOR A COMPLETE SYSTEM IN FULL COMPLIANCE WITH ALL APPLICABLE CODES.
18. IDENTIFICATION NAME PLATES FOR BRANCH CIRCUIT PANELS SHALL MATCH THE NOMENCLATURE PROVIDED BY THE OWNER AT THE END OF THE CONTRACT.
19. UNLESS SPECIFICALLY SHOWN ON THESE PLANS NO STRUCTURAL MEMBER SHALL BE CUT, DRILLED, NOR NOTCHED WITHOUT PRIOR WRITTEN AUTHORIZATION FROM THE STRUCTURAL ENGINEER.

ELECTRICAL SYMBOL LIST

- RIGID STEEL CONDUIT RUN CONCEALED, 3/4" MINIMUM.
- CONDUIT STUBBED OUT AND CAPPED. PULL LINE IN PLACE.
- #10 — CONDUIT RUN WITH TICK MARKS INDICATE QUANTITY OF #12 THHN / THWN COPPER CONDUCTORS -U.O.N. CONDUIT SHOWN WITH NO TICK MARKS INDICATES 2 #12 THHN / THWN CONDUCTORS -U.O.N.
- B-1,3 — CONDUIT HOME RUN TO PANELBOARD. LETTER AND NUMERALS INDICATES ELECTRICAL PANEL AND CIRCUIT NUMBER.
- HOMERUN TO DESTINATION AS INDICATED. REFER TO CONDUIT SYMBOL ABOVE.
- BRANCH CIRCUIT PANEL, MOUNTING AS SHOWN ON SCHEDULES.
- (E) — EXISTING TO REMAIN.
- DW — 3/4"C. WITH 2/C#8 CLASS 2 DATA WIRE PER SWITCH LEG (DIMMING CONTROL#2). QUANTITY OF CROSS TICKS REPRESENT QUANTITY OF SWITCH LEGS WITHIN CONDUIT.
- C.O. — CONDUIT ONLY.
- MOLDED CASE CIRCUIT BREAKER (SINGLE LINE DIAGRAM).
- GROUND.
- 3 — MOUNTED AT +48" TO TOP OF THE BOX. STAINLESS STEEL WALL PLATE. LEVITON LUMINA RF #2350-2-NOZ. SUPERSCRIPT DENOTES: RF TYPE SINGLE POLE SWITCH, LETTER AT BOTTOM INDICATES OUTLETS CONTROLLED.
  - 2 - DOUBLE POLE — P - PILOT LIGHT
  - 3 - THREE WAY — K - KEY OPERATED
  - 4 - FOUR WAY — T - TIMER
- X — NOTE IDENTIFICATION SYMBOL. NUMBER INDICATES NOTE.
- 3 A +20'-0" — LIGHTING FIXTURE IDENTIFICATION SYMBOL. LETTER INDICATES TYPE OF FIXTURE NUMERAL AT TOP OF HEXAGON INDICATES NUMBER OF FIXTURES REQUIRED. NUMBER AT BOTTOM OF HEXAGON INDICATES MOUNTING HEIGHT FROM FLOOR TO BOTTOM OF FIXTURE. OMMISSION OF MOUNTING HEIGHT INDICATES CEILING MOUNTING.
- J — JUNCTION BOX.
- AC 1 — HVAC EQUIPMENT DESIGNATION. SEE MECHANICAL PLANS.
- AS/ P/ AF — FUSED DISCONNECT SWITCH. HEAVY DUTY TYPE WITH REQUIRED QUANTITY OF DUAL ELEMENT TIME DELAY FUSES. NEMA 3R FOR OUTDOOR USE. AS=SWITCH AMPERE RATING. P=NUMBER OF POLES. AF=FUSE AMPERE RATING.
- X E4.X — DETAIL CALLOUT
- DUPLEX RECEPTACLE, FLUSH IN WALL, GROUNDING TYPE (20 AMP, 120V., WALL PLATE TO MATCH DEVICE) MTD. AT +15" TO BOTTOM OF BOX.
- GFI — DUPLEX RECEPTACLE WITH GROUND FAULT INTERRUPTER, FLUSH IN WALL(20 AMP, 120V., WALL PLATE TO MATCH DEVICE) MTD. AT +15" TO BOTTOM OF BOX.
- (E) — EXISTING EQUIPMENT TO REMAIN.
- (R) — EXISTING EQUIPMENT TO BE COMPLETELY DISCONNECTED AND REMOVED.
- (N) — NEW EQUIPMENT.
- (RR) — EXISTING FIXTURE TO BE REMOVED AND RELOCATED.
- (EN) — EXISTING FIXTURE IN NEW LOCATION.

DEMOLITION NOTES

1. ALL ELECTRICAL EQUIPMENT THAT IS MARKED FOR DELETION, SHALL BE REMOVED COMPLETELY, INCLUDING CONDUIT AND WIRES BACK TO THE POINT OF INTERCEPTION INDICATED ON PLAN.
2. WHERE EXISTING EQUIPMENT TO REMAIN IS FED BY EQUIPMENT BEING REMOVED BY WORK UNDER THIS CONTRACT, THE CONTRACTOR SHALL ROUTE NEW CONDUIT, WIRE, ETC., AS REQUIRED TO MAINTAIN THE SUBJECT EQUIPMENT IN OPERATION.
3. THE ELECTRICAL CONTRACTOR SHALL COORDINATE WITH THE OWNER PRIOR TO REMOVAL OF EXISTING ELECTRICAL EQUIPMENT AND TURN OVER REMOVED EQUIPMENT THAT THE OWNER REQUESTS, IN AS-FOUND CONDITION. EQUIPMENT THAT IS TO BE TURNED OVER SHALL BE BOXED AND TAGGED TO IDENTIFY THE SPECIFIC EQUIPMENT.
4. ALL EXISTING CONDUITS WITHIN PROJECT AREA WHETHER SHOWN ON PLAN OR NOT, SHALL BE A PART OF THIS CONTRACT.
5. IT SHALL BE THE RESPONSIBILITY OF THIS CONTRACTOR TO MAINTAIN CONTINUITY OF ALL ELECTRICAL AND COMMUNICATION SYSTEMS, EQUIPMENT, ETC., REMAINING IN OPERATION. MAINTAINING CONTINUITY SHALL CONSIST OF RE-ROUTING CONDUIT, WIRE, ETC., AS REQUIRED TO MAINTAIN THE SUBJECT SERVICES IN OPERATION.
6. ALL CIRCUITS SERVING OUTLETS/DEVICES TO BE REMOVED AS PART OF THE SCOPE OF WORK SHALL BE TRACED BACK TO THE SERVING PANEL PRIOR TO DISCONNECTING. IN THE EVENT THAT THE EXISTING CIRCUITS TO BE REMOVED SERVE AN OUTLET/DEVICE REMAINING IN OPERATION THE CONTRACTOR SHALL NOTIFY THE ARCHITECT/ENGINEER AND OBTAIN DIRECTION PRIOR TO PROCEEDING WITH THE WORK.

REFERENCES AND ABBREVIATIONS

	DETAIL REFERENCE	MCB	MAIN CIRCUIT BREAKER
	KEYNOTE REFERENCE	FLA	FULL LOAD AMPS
A.F.F.	ABOVE FINISH FLOOR	C.	CONDUIT
U.O.N.	UNLESS OTHERWISE NOTED	V.	VOLTS
C.O.	CONDUIT ONLY W/PULL ROPE	A	AMPS
WP	WEATHER PROOF	GFI	GROUND FAULT INTERRUPTER
CU.	COPPER	GND	GROUND
M.L.O.	MAIN LUGS ONLY	V.L.	VERIFY LOCATION
E or (E)	EXISTING TO REMAIN	A.C.	ABOVE COUNTER
EM.	EMERGENCY	N.L.	NIGHT LIGHT

LIGHTING FIXTURE SCHEDULE

TYPE	MANUFACTURER CATALOG*	LAMP QTY. & TYPE	FIXTURE WATTAGE	VOLTS	REMARKS
A	KENALL LIGHTING *FLHA12-48-F-LG-FA-55C37K-DCC-DV OR APPROVED EQUAL	5858 LUMEN LED 93 LM/W 3700K	55	120-277	1X4 LED FIXTURE. FIXTURE TO BE PROVIDED WITH SURFACE MOUNTING, 3700K/82CRI MIN, 0-10V LED DIMMING DRIVER
B	KENALL LIGHTING *FLHA5-48-F-LG-FP-45T-27/65K8-ATW-DV OR APPROVED EQUAL	4800 LUMEN LED 105 LM/W 3500K	46	120-277	FIXTURE TO BE PROVIDED WITH SURFACE MOUNTING, 3500K/82CRI MIN, 0-10V LED DIMMING DRIVER
C	KENALL LIGHTING *HADL6-FF-2RW-22C-37K8-M-RW-G-RIG6-120-DIMI OR APPROVED EQUAL	1278 LUMEN LED 51 LM/W 3700K	24	120	6" DOWNLIGHT LED FIXTURE. FIXTURE TO BE PROVIDED WITH 3700K/80 CRI MIN, 0-10V LED DIMMING DRIVER.
D	HUBBELL LIGHTING *LNC2-SL-3K-8710-2-1-BLT-SCP OR APPROVED EQUAL	1937 LUMEN LED 92 LM/W 3000K	21	120	WALL PACK FIXTURE. FIXTURE TO BE PROVIDED WITH 3000K, PROGRAMMABLE OCCUPANCY SENSOR WITH BUILT IN PHOTOCELL.

SINGLE LINE DIAGRAM

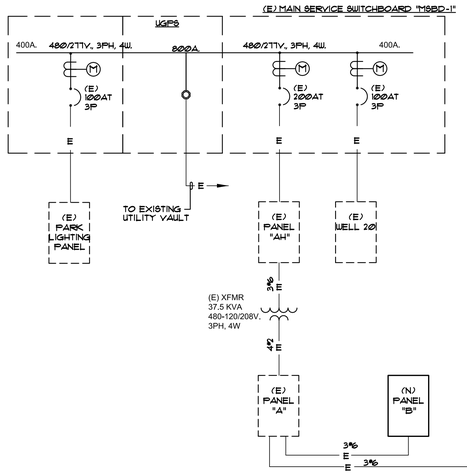

PANEL "AH" LOAD SUMMARY

*	EXISTING LOAD	241A
	25% PER CEC 220.87	61A
	NEW LOAD (PANEL B HIGH-LEG)	87A
	NEW LOAD (PANEL C HIGH-LEG)	83A
	TOTAL	472A

* BASED ON PG&E HIGH DEMAND KW FOR PAST 24 MONTHS

PANEL "A" LOAD SUMMARY

*	EXISTING LOAD	553A
	25% PER CEC 220.87	138A
	NEW LOAD (PANEL "B" AND "C")	220A
	TOTAL	911A

* BASED ON PG&E HIGH DEMAND KW FOR PAST 24 MONTHS ON SERVICE PANEL "AH".

(N)PANEL "B"
VOLTAGE: 240/120V-3-WIRE
LOCATION: JANITOR RM. 103
MAIN BREAKER: M. L. O.
BUS SIZE COPPER: 125A
SCA: 10 KAIC
MOUNT: SURFACE
ENTRY: BOTTOM

DESCRIPTION	CKT	BKR	P	LTS	REC	MSC	MTR	A-VA	B-VA	AMPS
RECEPTACLES	1	20	1		4			720		
SPARE	3	20	1							
SPARE	5	20	1							
SPARE	7	20	1							
SPARE	9	20	1							
SPARE	11	20	1							
SPARE	13	20	1							
SPARE	15	20	1							
SPARE	17	20	1							
SPARE	19	20	1							
SPARE	21	20	1							
SPARE	23	20	1							
				SUB TOTAL VOLT/AMPS:				720	0	
LIGHTING - WOMEN AND MEN RR	2	20	1	13		3		1320		
EXTERIOR LIGHTING	4	20	1	5					105	
SPARE	6	20	1							
SPARE	8	20	1							
SPARE	10	20	1							
SPARE	12	20	1							
SPARE	14	20	1							
SPARE	16	20	1							
SPARE	18	20	1							
SPARE	20	20	1							
SPARE	22	20	1							
SPARE	24	20	1							
				SUB TOTAL VOLT/AMPS:				1320	105	
				TOTAL VOLT/AMPS:				2040	105	
				TOTAL LCL/PHASE:				330	26	
CONNECTED:	2145 VA			TOTAL VOLT/AMPS:				2370	131	
25% OF MTR:	0 VA			TOTAL AMPS/PHASE:				20	1	
25% OF LCL:	89 VA									
CALCULATED:	2234 VA	=	9.31	AVERAGE AMPS						

(N)PANEL "C"
VOLTAGE: 240/120V-3-WIRE
LOCATION: CONCESSION BLDG.
MAIN BREAKER: M. L. O.
BUS SIZE COPPER: 125A
SCA: 10 KAIC
MOUNT: SURFACE
ENTRY: BOTTOM

DESCRIPTION	CKT	BKR	P	LTS	REC	MSC	MTR	A-VA	B-VA	AMPS
RECEPT. CONCESSION RM.	1	20	1		5			900		
RECEPT. OFFICE & CLOSET RM.	3	20	1		10				1800	
WATER HEATER	5	20	1			1		180		
SPARE	7	20	1							
SPARE	9	20	1							
SPARE	11	20	1							
SPARE	13	20	1							
SPARE	15	20	1							
SPARE	17	20	1							
SPARE	19	20	1							
SPARE	21	20	1							
SPARE	23	20	1							
				SUB TOTAL VOLT/AMPS:				1080	1800	
LIGHTING - CONCESSION & OFFICE	2	20	1	8		2		1148		
EXTERIOR LIGHTING	4	20	1	5					370	
SPARE	6	20	1							
SPARE	8	20	1							
SPARE	10	20	1							
SPARE	12	20	1							
SPARE	14	20	1							
SPARE	16	20	1							
SPARE	18	20	1							
SPARE	20	20	1							
SPARE	22	20	1							
SPARE	24	20	1							
				SUB TOTAL VOLT/AMPS:				1148	370	
				TOTAL VOLT/AMPS:				2228	2170	
				TOTAL LCL/PHASE:				287	93	
CONNECTED:	4398 VA			TOTAL VOLT/AMPS:				2515	2263	
25% OF MTR:	0 VA			TOTAL AMPS/PHASE:				21	19	
25% OF LCL:	95 VA									
CALCULATED:	4492 VA	=	18.72	AVERAGE AMPS						

(E)PANEL "A"
VOLTAGE: 120/208V-4-WIRE
LOCATION: EQUIPMENT ROOM
MAIN BREAKER: 100A
BUS SIZE COPPER: 225A
SCA: 10 KAIC
MOUNT: SURFACE
ENTRY: BOTTOM

	DESCRIPTION	CKT	BKR	P	LTS	REC	MSC	MTR	A-VA	B-VA	C-VA	AMPS
*	RECEPTS	1	20	1								
	VEND. MACHINE	3	20	1								
	PUMP RM LIGHTS	5	20	1								
	CONTROL POWER VIA MAIN PUMP	7	20	2								
	W/CKT. 7	9	-	-								
	PUMP RM LIGHTS	11	20	1								
△	PANEL B	13	50	2					2370			
△	W/CKT. 13	15	-	-						131		
*	HEATER	17	20	1								
	MAIN PUMP	19	15	1								
	ANALYZER POWER	21	15	1								
	POOL LIGHT	23	30	2								
	W/CKT. 23	25	-	-								
	MAIN CL2	27	20	2								
	W/CKT. 27	29	-	-								
	SPARE	31	30	3								
	W/CKT. 31	33	-	-								
	W/CKT. 31	35	-	-								
					SUB TOTAL VOLT/AMPS:				2370	131.25	0	
*	EAVE TIME CLOCK	2	20	1								
	CL2 ALARM	4	20	1								
	HEATER	6	20	1								
	STORE ROOM LIGHTS	8	20	1								
△	PANEL C	10	50	2						2515		
△	W/CKT. 10	12	-	-							2263	
*	FAN	14	20	1								
	SPARE	16	20	1								
	CHEMICAL FAN	18	20	2								
	W/CKT. 18	20	-	-								
	TRANSFORMER	22	20	1								
	POOL VAC	24	20	1								
	CO2 PUMP AND CONTROL	26	20	3								
	W/CKT. 26	28	-	-								
	W/CKT. 26	30	-	-								
	MAIN CIRCUIT BREAKER	32	100	3								
	W/CKT. 32	34	-	-								
	W/CKT. 32	36	-	-								
					SUB TOTAL VOLT/AMPS:				0	2515	2263	
					TOTAL VOLT/AMPS:				2370	2646.3	2263	
					TOTAL LCL/PHASE:				0	0	0	
	CONNECTED: 7278.8 VA				TOTAL VOLT/AMPS:				2370	2646	2263	
	25% OF MTR: 0.0 VA				TOTAL AMPS/PHASE:				20	22	19	
	25% OF LCL: 0.0 VA											
	CALCULATED: 7278.8 VA	=	20.2	AVERAGE AMPS								

* = INDICATES EXISTING LOAD TO REMAIN. (LOADS FROM AS-BUILTS)

△ = INDICATES NEW LOAD ON EXISTING CIRCUIT BREAKER.

PBK
BERKELEY
2600 TENTH STREET, SUITE 700
BERKELEY, CA 94710-2597
510-450-1999 P.

HONEYBEE POOL RENOVATION

CITY OF ROHNERT PARK
1170 GOLF COURSE DRIVE
ROHNERT PARK, CA 94928

LICENSED ARCHITECT
LOREN GACHEN
C-37926
12/31/22
STATE OF CALIFORNIA

CONSULTANT
qed optimum energy design
Consulting Engineers
5515 Doyle Street
Suite 4
Emeryville, CA 94608
Telephone: (510) 837-9182

VANESSA GARRETT P.E. CE84141 — DATE
CITY ENGINEER

REVISION SCHEDULE			
NO	DATE	BY	DESCRIPTION
1	5/25/2022		AGENCY PLAN REVIEW
2	12/02/2022		AGENCY PLAN REVIEW

DRAWN:	CHECKED:
DATE: 02/25/2022	SCALE:
PROJECT NUMBER: 2010200	

ELECTRICAL GENERAL NOTES & LEGENDS

DRAWING NUMBER: **E0.1**

100% CD SUBMITTAL

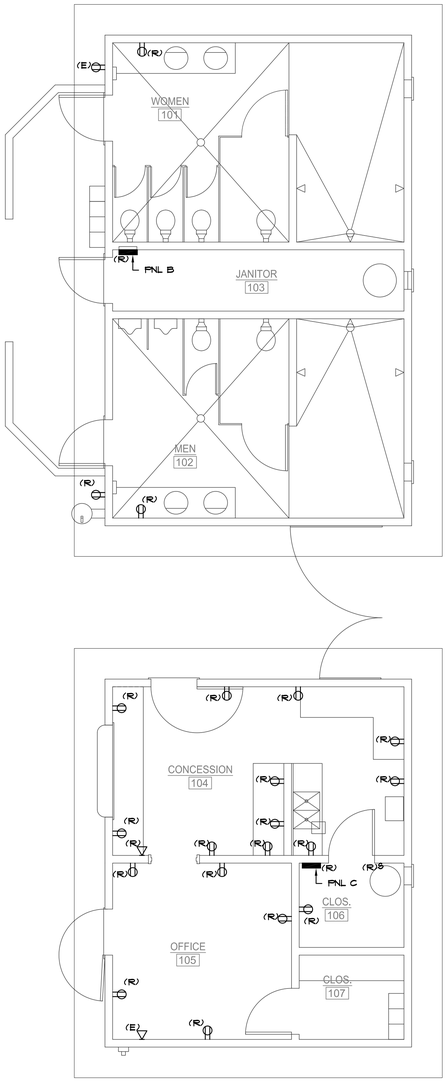

ELECTRICAL DEMOLITION FLOOR PLAN | 1/4" = 1'-0" | 2

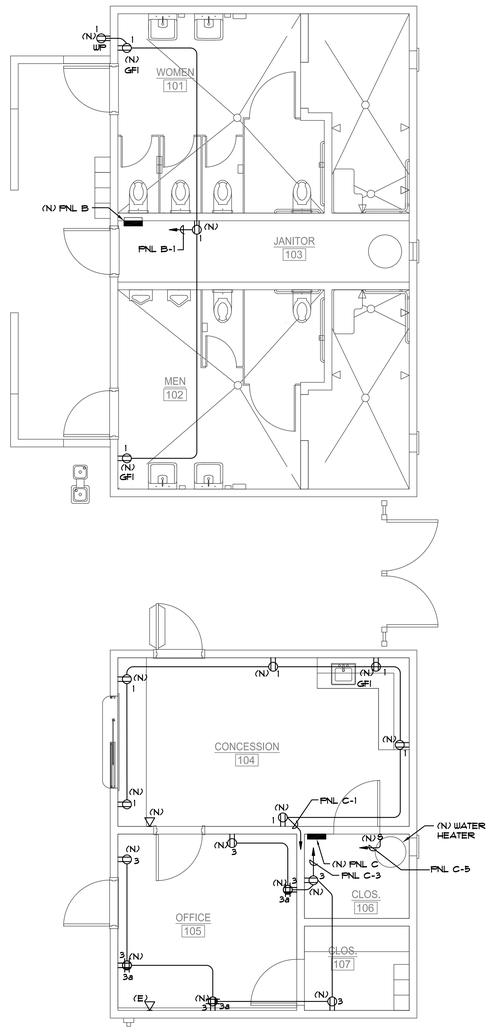

ELECTRICAL REMODEL FLOOR PLAN | 1/4" = 1'-0" | 1

NEW CONSTRUCTION GENERAL NOTES

1. EXACT LOCATION OF OUTLETS SHOWN ON THESE DRAWINGS SHALL BE COORDINATED WITH THE ARCHITECTURAL ELEVATIONS PRIOR TO ROUGH-IN AND SHALL BE LOCATED IN SUCH A MANNER TO AVOID INTERFERENCES WITH OTHER OUTLETS AND CASEWORK.
2. REFER TO MECHANICAL AND PLUMBING DRAWINGS FOR EXACT LOCATION AND ADDITIONAL REQUIREMENTS.

CONSTRUCTION KEYNOTES

PBK
BERKELEY
2600 TENTH STREET, SUITE 700
BERKELEY, CA 94710-2597
510-450-1999 P

HONEYBEE POOL RENOVATION

CITY OF ROHNERT PARK
1170 GOLF COURSE DRIVE
ROHNERT PARK, CA 94928

LICENSED ARCHITECT
LOREN GACHEN
C-37926
12/9/22
STATE OF CALIFORNIA

CONSULTANT
oed optimum energy design
Consulting Engineers
5515 Doyle Street
Suite 4
Emeryville, CA 94608
Telephone: (510) 837-9182

VANESSA GARRETT P.E. CE84141 — DATE
CITY ENGINEER

REVISION SCHEDULE

NO	DATE	BY	DESCRIPTION
1	5/25/2022		AGENCY PLAN REVIEW
2	12/02/2022		AGENCY PLAN REVIEW

DRAWN:	CHECKED:
DATE: 02/25/2022	SCALE:
PROJECT NUMBER: 2010200	

ELECTRICAL FLOOR PLAN - DEMO & REMODEL

DRAWING NUMBER: E2.0

100% CD SUBMITTAL

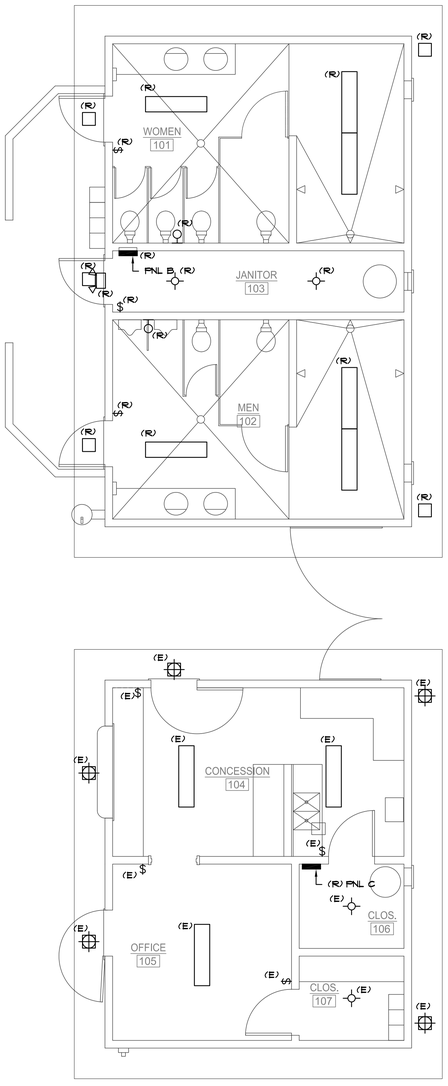

LIGHTING DEMOLITION FLOOR PLAN | 1/4" = 1'-0" | 2

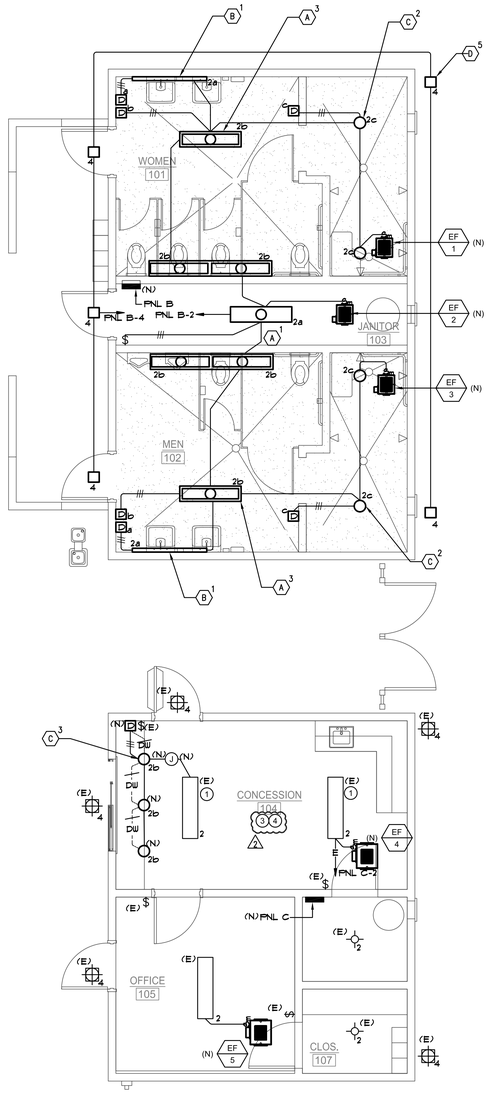

LIGHTING REMODEL FLOOR PLAN | 1/4" = 1'-0" | 1

NEW CONSTRUCTION GENERAL NOTES

1. EXACT LOCATION OF OUTLETS SHOWN ON THESE DRAWINGS SHALL BE COORDINATED WITH THE ARCHITECTURAL ELEVATIONS PRIOR TO ROUGH-IN AND SHALL BE LOCATED IN SUCH A MANNER TO AVOID INTERFERENCES WITH OTHER OUTLETS AND CASEWORK.
2. REFER TO MECHANICAL AND PLUMBING DRAWINGS FOR EXACT LOCATION AND ADDITIONAL REQUIREMENTS.

KEYNOTES

1. EXISTING LIGHTS TO REMAIN. CONTRACTOR TO PROTECT EXISTING CONDUITS IN PLACE.
2. LIGHT BULBS SHALL BE SHIELDED, COATED, OR OTHERWISE SHATTER-RESISTANT IN AREAS WHERE THERE IS NONPREPACKAGED READY-TO-EAT FOOD, CLEAN EQUIPMENT, UTENSILS, LINENS, OR UNWRAPPED SINGLE-USE ARTICLES.
3. MINIMUM OF 20 FOOT-CANDLES OF LIGHT IS PROVIDED AT A SURFACE WHERE FOOD IS PROVIDED FOR CONSUMER SELF-SERVICE OR WHERE FRESH PRODUCE OR PREPACKAGED FOODS ARE SOLD OR OFFERED FOR CONSUMPTION, IN SERVICE STATIONS WHERE FOOD IS PREPARED, AT A DISTANCE OF 30 INCHES ABOVE THE FLOOR IN AREAS USED FOR HANDWASHING, WAREWASHING, AN EQUIPMENT AND UTENSIL STORAGE, AND IN TOILET ROOMS, AND IN ALL AREAS AND ROOMS DURING PERIODS OF CLEANING.

△2

PBK
BERKELEY
2600 TENTH STREET, SUITE 700
BERKELEY, CA 94710-2597
510-450-1999 P

HONEYBEE POOL RENOVATION

CITY OF ROHNERT PARK
1170 GOLF COURSE DRIVE
ROHNERT PARK, CA 94928

LICENSED ARCHITECT
LOREN GACHEN
C-37926
12/01/22
STATE OF CALIFORNIA

CONSULTANT
oed optimum energy design
Consulting Engineers
5515 Doyle Street
Suite 4
Emeryville, CA 94608
Telephone: (510) 837-9182

VANESSA GARRETT P.E. CE84141 — DATE
CITY ENGINEER

REVISION SCHEDULE

NO	DATE	BY	DESCRIPTION
△1	5/25/2022		AGENCY PLAN REVIEW
△2	12/02/2022		AGENCY PLAN REVIEW

DRAWN:	CHECKED:
DATE: 02/25/2022	SCALE:
PROJECT NUMBER: 2010200	

LIGHTING FLOOR PLAN - DEMO & REMODEL

DRAWING NUMBER: E2.1

100% CD SUBMITTAL

LEGEND

MD	=	MAIN DRAIN
HR	=	HANDRAIL
SS	=	SURFACE SKIMMER
AL	=	ACCESSIBLE LIFT
GR	=	GRABRAIL
RP	=	ROPE PLATFORM
(E)	=	EXISTING
(N)	=	NEW
		POOL AND EQUIPMENT DEMOLITION

SWIMMING POOL DATA

SURFACE AREA	=	4,350 SQ. FT.
PERIMETER	=	320 FT.
DEPTHS	=	2'-0" TO 11'-6"
VOLUME	=	152,000 GAL.
6 HR TURNOVER	=	422 GPM

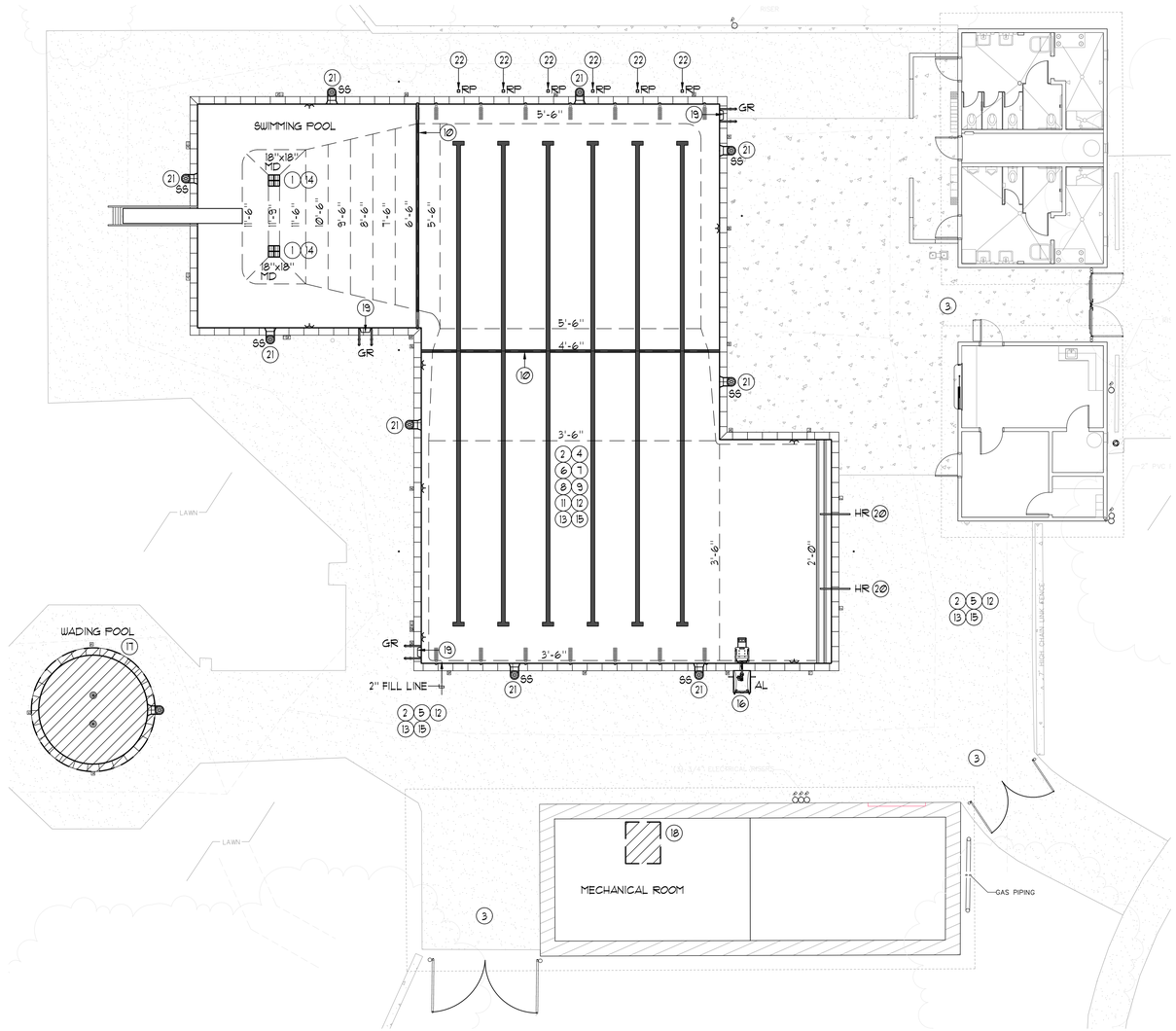

DEMOLITION/CONSTRUCTION NOTES

1. CARE IS TO BE TAKEN DURING POOL DRAIN DOWN, TO RELIEVE ANY HYDROSTATIC PRESSURE THROUGH EXISTING HYDROSTATIC RELIEF VALVES AND DRAINING THE POOL SLOWLY.
2. THE CONTRACTOR SHALL COORDINATE DEMOLITION WITH OTHER TRADES, AND SHALL PROTECT ALL EXISTING WORK, BUILDINGS, UTILITIES, ETC. TO REMAIN AS REQUIRED FOR RENOVATION OF SWIMMING POOL AND COMPLETE REMOVAL OF WADING POOL.
3. COORDINATE INGRESS/EGRESS AND HAUL ROUTES WITH THE OWNER PRIOR TO START OF WORK
4. (A-E / SP-2) POOL PLAN VIEWS AND SECTIONS ARE SHOWN FOR CONTRACTOR INFORMATION AND ASSISTANCE. THE CONTRACTOR IS RESPONSIBLE FOR INDIVIDUAL SQUARE FOOTAGE TAKE-OFFS AND ESTIMATIONS WITH REGARD TO DEMOLITION, PREPARATION, AS WELL AS MEANS AND METHODS OF CONSTRUCTION. CONTRACTOR SHALL VISIT THE SITE AS REQUIRED TO ACCOMPLISH THE WORK, AND TO BECOME FAMILIAR WITH SCOPE AND SERVICES OF WORK REQUIRED.
5. COORDINATE PROPOSED CONTRACTOR STAGING AREA WITH THE OWNER PRIOR TO CONSTRUCTION. PROVIDE TEMPORARY PHONE, TOILET(S), FENCING, GATES, ETC. AS REQUIRED.
6. REMOVE EXISTING POOL PLASTER FINISH, RACING LANE LINE TILE, TARGET TILE, WATERLINE TILE AND STEP TRIM TILE DOWN TO ORIGINAL SOUND CONCRETE/SHOTCRETE. ANY CRACKS LARGE ENOUGH TO INSERT THE EDGE OF A DIME INTO, SHALL BE CHIPPED OUT TO A MINIMUM OF ¾"x¾" AND THEN FILLED FLUSH WITH NON-SHRINK GROUT. ALL EXPOSED REBAR, RUST SPOTS, ETC. SHALL BE BUSHED DOWN 1½" BELOW FINISH SURFACE, ZINC COATED AND FILLED FLUSH WITH NON-SHRINK GROUT. ANY OTHER IMPERFECTIONS IN THE POOL SHELL SHALL BE REPAIRED PRIOR TO INSTALLING NEW TILED LANE LINES, END WALL TARGETS, DEPTH MARKER TILE AND PRIOR TO NEW WHITE PLASTER INSTALLATION.
7. PROVIDE NEW SWIMMING POOL WATER LINE TILE, LANE LINE TILE, DEPTH MARKER TILE, ETC. PER SPECIFICATIONS, DEPTH MARKERS SHALL BE LOCATED AT MAXIMUM 25'-0" O.C. AROUND ENTIRE POOL PERIMETER AND SHALL HAVE MINIMUM 4" TALL NUMBERS AND LETTERS. PROVIDE NEW INTERNATIONAL 'NO DIVING' TILES AT ALL DEPTH MARKER LOCATIONS 6'-0" DEPTH OR SHALLOWER ON DECK DEPTH MARKERS.
8. REPLACE ANY DAMAGED OR MISSING POOL FITTINGS, ROPE ANCHORS, ETC. LOST DURING DEMOLITION/ CONSTRUCTION AS REQUIRED.
9. (1-2 / SP-4) REPLACE ANY DAMAGED OR MISSING WALL INLET AND REPLACE FLOOR INLET COVER PLATES (IF APPLICABLE), AND ANY DAMAGED INLETS COMPLETELY PER SPECIFICATIONS.
10. REMOVE EXISTING 4'-6" AND 6'-6" WATER DEPTH TILE MARKERS (4" LINE) AND PROVIDE NEW 'DAL-TILE' #D621 NAUTICAL BLUE.
11. THE CONTRACTOR SHALL INSURE THAT ALL SURFACES ARE PREPARED TO A MINIMUM ¼" AMPLITUDE TO RECEIVE PLASTER FINISH. WEATHER CONDITIONS SHALL BECOME A CRITICAL PART OF WORK AND SHALL BE TAKEN INTO CONSIDERATION AT THE TIME OF PLASTER APPLICATION.
12. THE CONTRACTOR SHALL PROVIDE A SUFFICIENT NUMBER OF WORKERS TO INSURE THAT THE ENTIRE POOL CAN BE PLASTERED IN A SINGLE DAY OR SHALL PROVIDE CONTINUAL MISTING OF PLASTERED SURFACES TO INSURE THAT PLASTER IS NOT EXPOSED TO THE AIR FOR A PERIOD OF TIME WHICH WOULD CAUSE DAMAGE IN ANY WAY.
13. THE OWNER SHALL IDENTIFY THE SWIMMING POOL FILL WATER SOURCE FROM CLOSEST FIRE HYDRANT AND SHALL PAY FOR THE WATER TO FILL THE POOL. THE CONTRACTOR IS RESPONSIBLE FOR FIRE HOSE, HOSES, FILLING AND PROTECTION OF PLASTER SURFACES. FILL SOURCE SHALL BE BLOWN-OFF INITIALLY TO PROVIDE A CLEAN DOMESTIC WATER SOURCE. THE CONTRACTOR SHALL PROVIDE CONTINUOUS FILL UNTIL THE WATER IS AT OPERATIONAL LEVEL. THE CONTRACTOR SHALL BE RESPONSIBLE FOR CLEANING AND BALANCING OF THE POOL WATER FOR A PERIOD OF NOT LESS THAN FOURTEEN (14) DAYS AFTER PLASTER. THE CONTRACTOR SHALL COORDINATE HIS EFFORTS WITH OWNERS STAFF TO PROVIDE INSTRUCTION AND TRAINING IN PROPER OPERATION OF POOL IN CONJUNCTION WITH NEW PLASTER SURFACES.
14. (8 / SP-3) THE CONTRACTOR SHALL REMOVE EXISTING POOL MAIN DRAIN FRAMES AND GRATES AND PROVIDE NEW 18"x18" MAIN DRAIN FRAMES AND GRATES PER THE SPECIFICATIONS AND PROVIDE VGBA CERTIFICATION TO THE OWNER AND HEALTH DEPARTMENT.
15. CONTRACTOR IS TO PHOTOGRAPH AND DOCUMENT ON A PLAN ANY AND ALL EXISTING DAMAGED ITEMS/SURFACES, FINISHES IN AND IMMEDIATELY AROUND THE WORK AREA AND ALONG ALL WORK PATHS FROM STAGING AREA PRIOR TO THE START OF WORK. CONTRACTOR IS TO SITE WALK ALL EXISTING DAMAGED AREAS WITH THE OWNER AND PROVIDE A COPY OF THE PHOTOGRAPHS AND DOCUMENTATION BEFORE WORK BEGINS. FAILURE TO PROVIDE THIS INFORMATION REPRESENTS ACCEPTANCE BY THE CONTRACTOR THAT ALL EXISTING SURROUNDING FINISHES (CONCRETE, AC PAVING, FLOORING, ETC.) AND ALL GATES, DOORS, PATHWAYS, ETC. ARE UNDAMAGED AND IN CLEAN AND FUNCTIONING CONDITION, AND CONTRACTOR ACCEPTS THE RESPONSIBILITY TO MAINTAIN AND CORRECT ANY DAMAGE LATER FOUND BY THE OWNER DURING CONSTRUCTION PERIOD IN THESE AREAS AT NO EXPENSE TO THE OWNER.
16. RELOCATE EXISTING ACCESSIBLE LIFT PER SP-1.
17. DEMOLISH AND REMOVE EXISTING WADING POOL TO EXTENTS SHOWN ON PLANS, BACKFILL AND COMPACT SOIL PER GEOTECHNICAL REPORT. SEE ARCH PLANS FOR NEW DECKING AND LAYOUT.
18. REMOVE ALL (E) WADING POOL MECHANICAL EQUIPMENT AND ASSOCIATED PIPING IN MECHANICAL ROOM. CAP OFF AND ABANDON ALL PIPE STUBS WITHIN 12" OF FLOOR/WALL.
19. (7 / SP-3) REMOVE ALL EXISTING GRABRAIL STEPS. PRIOR TO REPLASTER ALL RUST SPOTS SHALL BE EXPOSED, BUSHED DOWN 1½" BELOW FINISHED SURFACE, ZINC COATED AND FILLED FLUSH WITH NON-SHRINK GROUT. THEN NEW CYCOLAC SEMI-RECESSED STEPS SHALL BE INSTALLED WITH NON-SHRINK GROUT. REMOVE AND PROTECT ALL (E) GRABRAILS DURING CONSTRUCTION. CLEAN AND POLISH (E) GRABRAILS WITH 600 GRIT POLISH AND REINSTALL AFTER WORK HAS BEEN COMPLETED.
20. (2 / SP-3 & 4-5 / SP-4) REMOVE AND PROTECT EXISTING HANDRAILS DURING CONSTRUCTION. CLEAN AND POLISH WITH 600 GRIT POLISH AND REINSTALL AFTER WORK HAS BEEN COMPLETED. PROVIDE (2) NEW HANDRAILS PER PLANS AND SPECIFICATIONS. BOND PER CODE.
21. CLEAN AND REPAIR ANY SURFACE SKIMMER WEIRS AND BASKETS WITH NEW PARTS TO PROVIDE PROPER SKIMMING OF SWIMMING POOL.
22. THE CONTRACTOR SHALL SAW CUT AND REMOVE EXISTING RACING PLATFORM ANCHORS COMPLETE AND FILL IN WITH NEW NON-SHRINK GROUT. FIELD VERIFY ALL CONDITIONS AND SAWCUT TO MINIMUM DECK DISTURBANCE.

EXISTING POOL EQUIPMENT SCHEDULE

EQUIPMENT	MANUFACTURER/BRAND	MODEL/DESCRIPTION
HEATER	RAYPAK	XTHERM MODEL I P7-1505A, TYPE P
FILTER (2)	PENTAIR/STARK	MODEL R27 HIGHRATE SAND FILTER, 344 GPM PER FILTER. FILTRATION AREA: 17.2 SQ. FT.
CIRCULATION PUMP	PENTAIR	C-SERIES, CHK-100, 10 HP
FLOW METER	SIGNET	4GF+ PN-385501
ACID FEED PUMP	BLUE/WHITE	*A1A4-TT PERISTALTIC METERING PUMP
CHLORINE FEED PUMP	BLUE-WHITE	*A2A24-SNEE PERISTALTIC METERING PUMP
WATER CHEMISTRY CONTROLLER	HAYWARD	CAT 600 CHEMICAL CONTROLLER

1 SWIMMING POOL / WADING POOL DEMOLITION PLAN

1/8"=1'-0"

PLOT DATE: 11/29/2022
1:16 PM

PBK
BERKELEY
2600 TENTH STREET, SUITE 700
BERKELEY, CA 94710-2597
510-450-1999 P

HONEYBEE POOL RENOVATION

CITY OF ROHNERT PARK
1170 GOLF COURSE DRIVE
ROHNERT PARK, CA 94928

LICENSED ARCHITECT
GREGORY S. FOX
C35602
REN. 07/31/23
STATE OF CALIFORNIA

CONSULTANT
AQUATIC DESIGN GROUP
3226 Faraday Ave. Carlsbad, CA 92008
AquaticDesignGroup.com
760.438.8400

VANESSA GARRETT P.E. CE84141 — DATE
CITY ENGINEER

REVISION SCHEDULE

NO	DATE	BY	DESCRIPTION
1	11/03/2022		AGENCY PLAN REVIEW
2	12/02/2022		AGENCY PLAN REVIEW

DRAWN: NMV — CHECKED: GSF
DATE: 02/25/2022 — SCALE: AS NOTED
PROJECT NUMBER: 2010200

SWIMMING POOL/ WADING POOL DEMOLITION PLAN

DRAWING NUMBER: DP-1

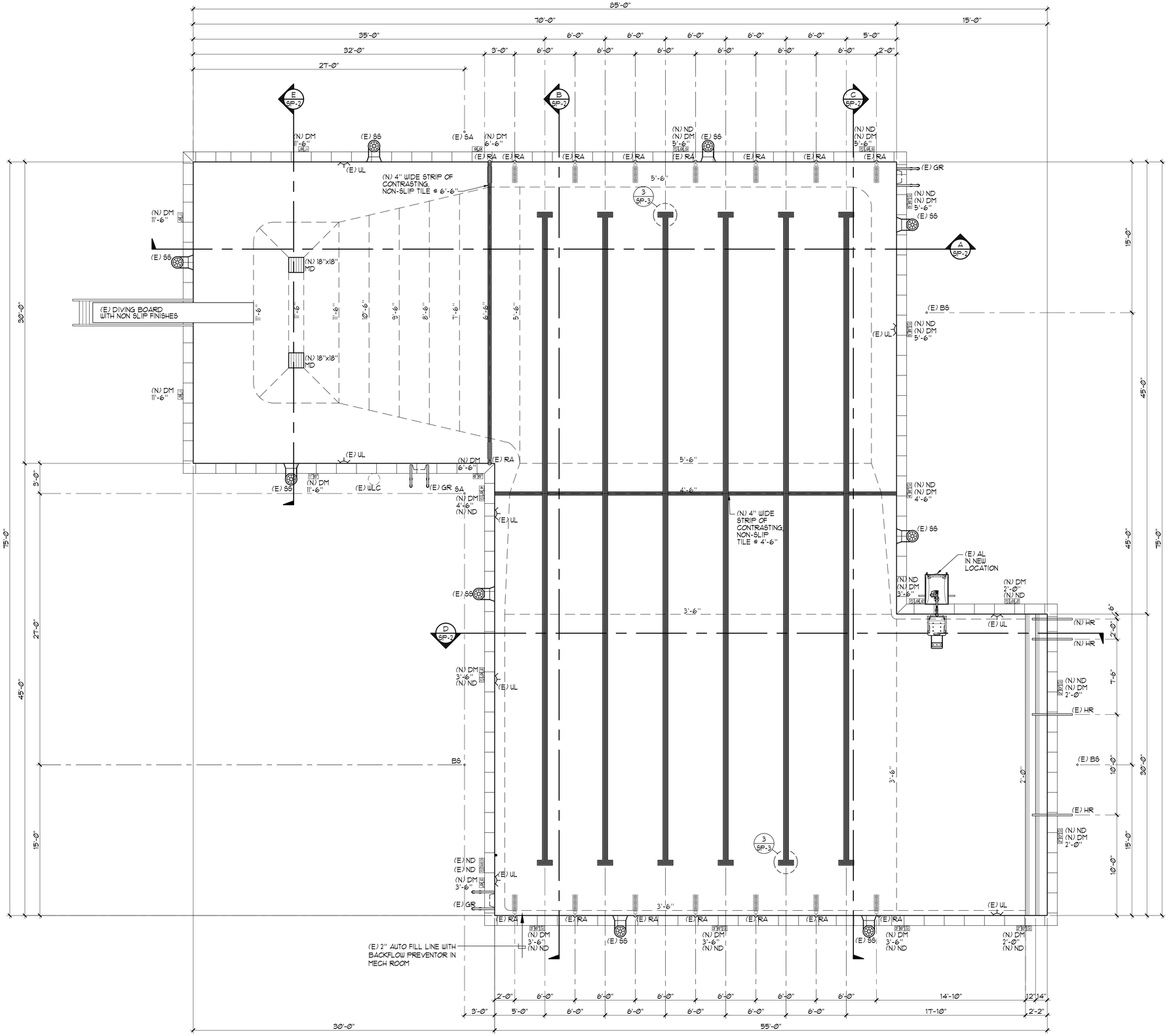

SWIMMING POOL DATA

SURFACE AREA	=	4,350 SQ. FT.
PERIMETER	=	320 FT.
DEPTH	=	2'-0" - 11'-6"
VOLUME	=	152,000 GAL.
6 HR. TURNOVER	=	422 GPM

LEGEND

HR	=	HANDRAIL
DM	=	DEPTH MARKER
ND	=	'NO DIVING' MARKER
MD	=	MAIN DRAIN
GR	=	GRAB RAIL
SS	=	SURFACE SKIMMER
WLC	=	WATER LEVEL CONTROL
AL	=	ACCESSIBLE LIFT
UL	=	UNDERWATER LIGHT
RA	=	ROPE ANCHOR
BS	=	BACKSTROKE STANCHION
(N)	=	NEW
(E)	=	EXISTING

NOTES:

1. NEW POOL SURFACE FINISH SHALL BE WHITE PLASTER.
2. NEW POOL DEPTH MARKERS SHALL BE LOCATED AROUND POOL PERIMETER AND COINCIDING WATER LINE AT SPACING NOT TO EXCEED 25'-0".
3. EACH POOL SHALL BE PROVIDED WITH A SHEPHERD'S HOOK ATTACHED TO A NON-TELESCOPING POLE, WITH A MIN. LENGTH OF FOURTEEN (14) FEET, AND MADE WITH A BLUNT END. EACH POOL SHALL BE PROVIDED WITH A USCG APPROVED LIFESAVING RING HAVING AN OUTSIDE DIAMETER OF FIFTEEN TO TWENT-FOUR INCHES (15"-24"), FIRMLY ATTACHED TO A ONE-QUARTER INCH TO THREE-EIGHTHS INCH (¼"-⅜") DIAMETER THROWING ROPE THAT IS AS LONG AS ONE AND ONE HALF (1½) TIMES THE MAXIMUM WIDTH OF THE POOL, OR FIFTY FEET (50'), WHICHEVER IS LESS. LIFESAVING EQUIPMENT SHALL BE MOUNTED IN A CONSPICUOUS PLACE WITHIN THE POOL ENCLOSURE AND BE READILY AVAILABLE FOR USE IN GOOD CONDITION. FIELD VERIFY EXISTING.
4. ALL EXISTING UNDERWATER LIGHTS SHALL BE ON A GFCI BREAKER. FIELD VERIFY AND REPLACE BREAKER IF IT IS NOT A GFCI BREAKER
5. AS PART OF THE SCOPE OF WORK THE CONTRACTOR SHALL FIELD VERIFY THAT THE EXISTING DIVING BOARD DOES NOT PROTRUDE MORE THAN 6FT PAST THE COPING AND THAT A MINIMUM 8'-6" DEPTH IS MAINTAINED FOR A MIN OF 6FT HORIZONTALLY FROM THE EDGE OF THE DIVING BOARD AND THAT THE SPRINGLINE HAS A MIN DEPTH OF 2'-6" AND PROVIDE A WRITTEN STATEMENT TO THE HEALTH DEPARTMENT STATING SUCH.

1 **SWIMMING POOL LAYOUT PLAN** ¼"=1'-0"

PLOT DATE: 11/29/2022 1:15 PM

PBK
BERKELEY
2600 TENTH STREET, SUITE 700
BERKELEY, CA 94710-2597
510-450-1999 P

HONEYBEE POOL RENOVATION

CITY OF ROHNERT PARK
1170 GOLF COURSE DRIVE
ROHNERT PARK, CA 94928

LICENSED ARCHITECT GREGORY S. PIRK C35802 REN. 07/31/23 STATE OF CALIFORNIA

CONSULTANT
AQUATIC DESIGN GROUP
3226 Faraday Ave. Carlsbad, CA 92008
AquaticDesignGroup.com
760-438-5420

VANESSA GARRETT P.E. CE84141 DATE
CITY ENGINEER

REVISION SCHEDULE

NO	DATE	BY	DESCRIPTION
1	11/03/2022		AGENCY PLAN REVIEW
2	12/02/2022		AGENCY PLAN REVIEW

DRAWN:	NMV	CHECKED:	GSF
DATE: 02/25/2022		SCALE:	AS NOTED
PROJECT NUMBER: 2010200			

SWIMMING POOL LAYOUT PLAN

DRAWING NUMBER: SP-1

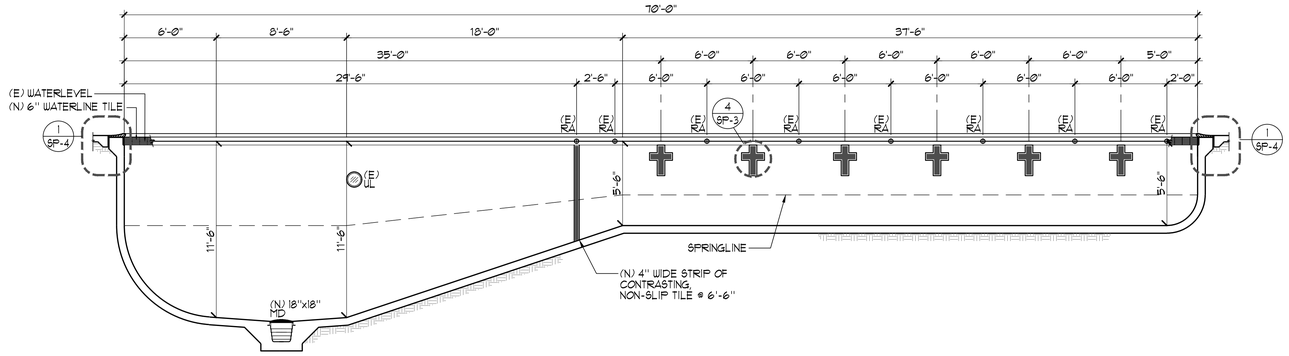

A SWIMMING POOL SECTION ¼"=1'-0"

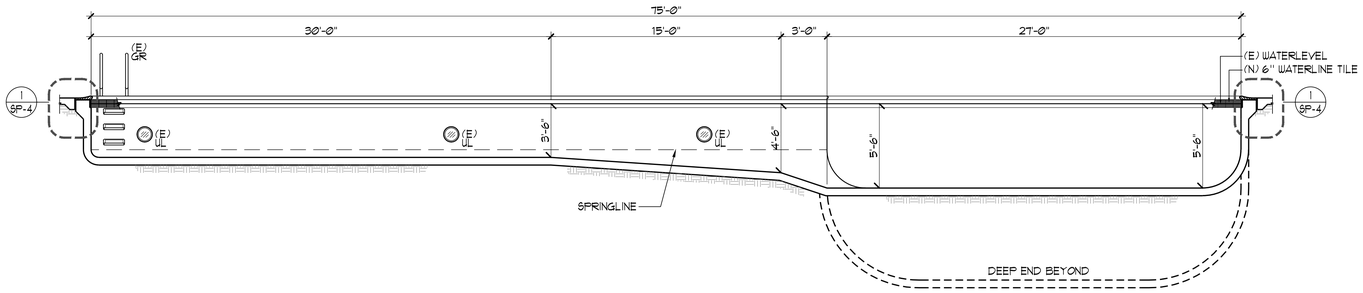

B SWIMMING POOL SECTION ¼"=1'-0"

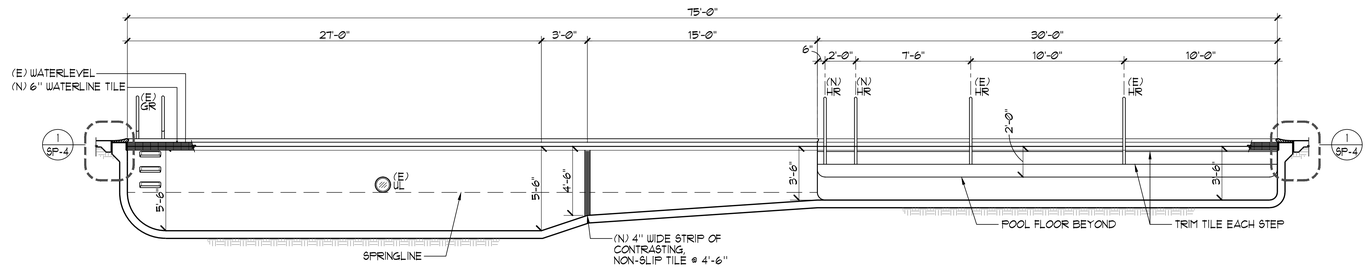

C SWIMMING POOL SECTION ¼"=1'-0"

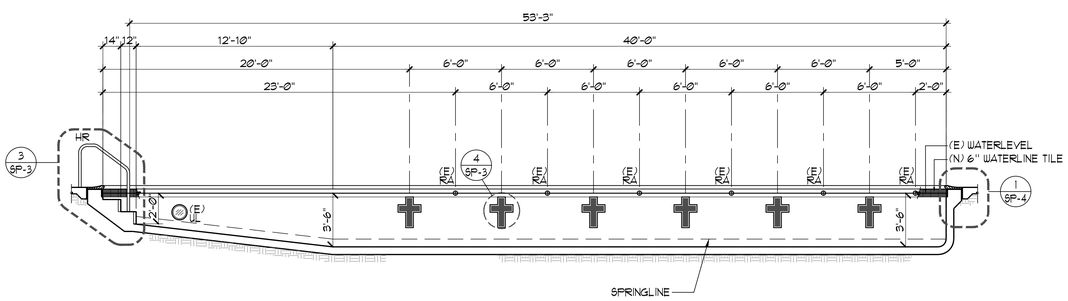

D SWIMMING POOL SECTION ¼"=1'-0"

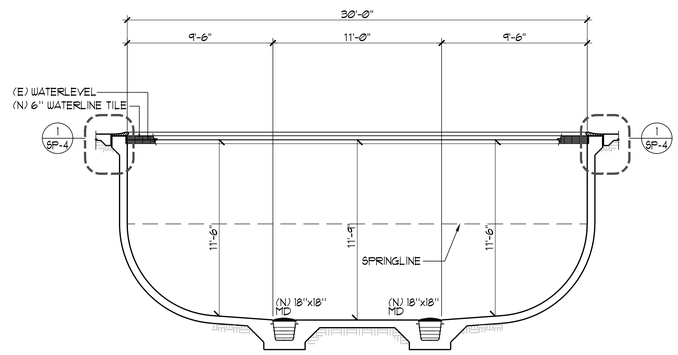

SWIMMING POOL SECTION ¼"=1'-0"

PBK
BERKELEY
2600 TENTH STREET, SUITE 700
BERKELEY, CA 94710-2597
510-450-1999 P

HONEYBEE POOL RENOVATION

CITY OF ROHNERT PARK
1170 GOLF COURSE DRIVE
ROHNERT PARK, CA 94928

LICENSED ARCHITECT
GREGORY S. PIRK
C35602
REN. 07/31/23
STATE OF CALIFORNIA

CONSULTANT
AQUATIC DESIGN GROUP
3226 Faraday Ave. Carlsbad, CA 92008
AquaticDesignGroup.com
760.438.8400

VANESSA GARRETT P.E. CE84141 — DATE
CITY ENGINEER

REVISION SCHEDULE

NO	DATE	BY	DESCRIPTION
1	11/03/2022		AGENCY PLAN REVIEW
2	12/02/2022		AGENCY PLAN REVIEW

DRAWN:	NMV	CHECKED:	GSF
DATE: 02/25/2022		SCALE:	AS NOTED
PROJECT NUMBER: 2010200			

SWIMMING POOL SECTIONS

DRAWING NUMBER: SP-2

PLOT DATE: 11/29/2022 1:16 PM

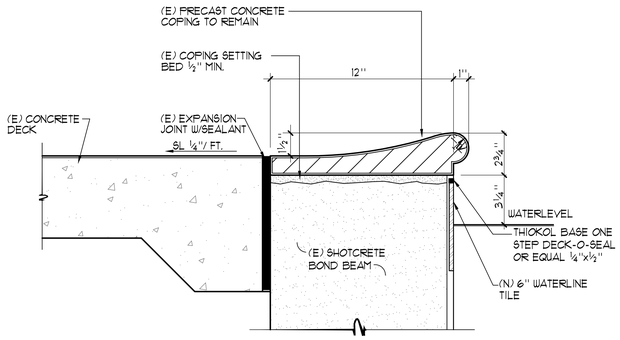

1 **TYPICAL COPING EDGE DETAIL** 3"=1'-0"

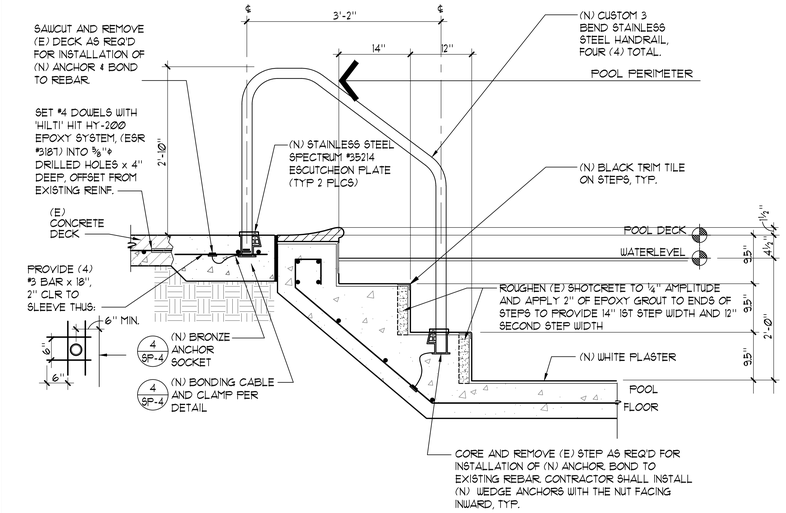

2 **HANDRAIL DETAIL** 1"=1'-0"

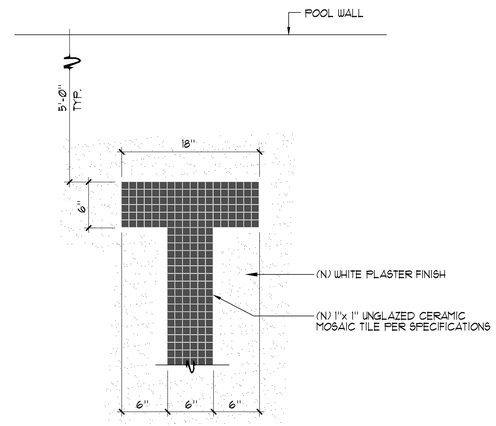

PLAN VIEW

3 **RACING LANE LINE** 1½" = 1'-0"

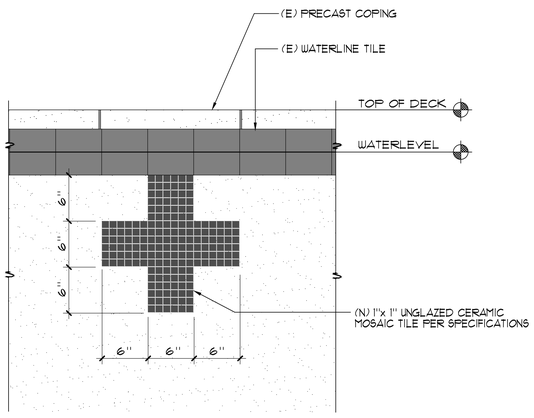

4 **END WALL TARGET** 1½"=1'-0"

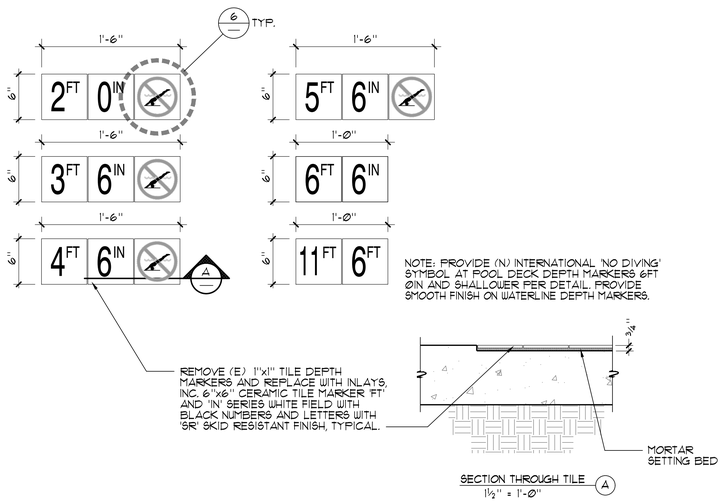

5 **DEPTH MARKERS** 1½" = 1'-0"

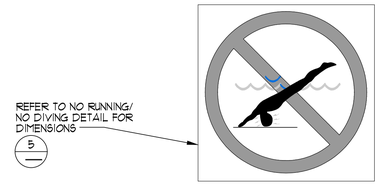

NOTE: PLACE IN DECK AT ALL 'NO DIVING' TILE MARKER LOCATIONS 6'-0" AND LESS

SILK SCREEN

1. INLAYS DOUBLE GLAZED WHITE SLIP RESISTANT TILE TYP. OF (1) PIECE OVER ¼" MORTAR BED WITH 1/16" GROUT JOINTS. SEE PLAN FOR LOCATION.
2. ½" WIDE RED CIRCLE WITH ½" WIDE RED DIAGONAL LINE.
3. ⅛" BLUE WATER.
4. 1/16" RED TICKS ABOUT THE HEAD.
5. TAN COLOR BODY WITH BLACK OUTLINE, HAIR AND TRUNKS.
6. ⅛" BLACK POOL FLOOR.

6 **INTERNATIONAL NO DIVIVING MARKER** ½"=1"

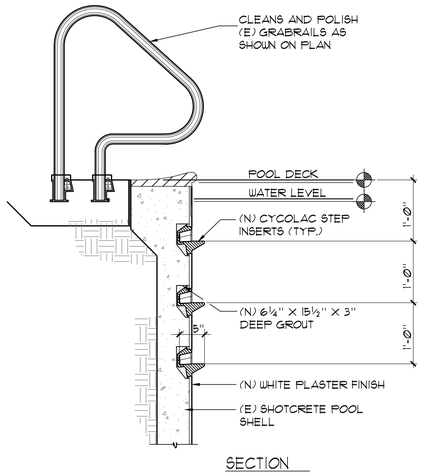

SECTION

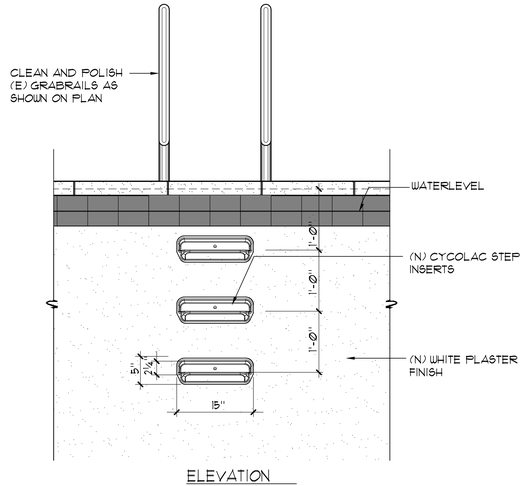

ELEVATION

7 **GRABRAIL WITH STEPS** 1"=1'-0"

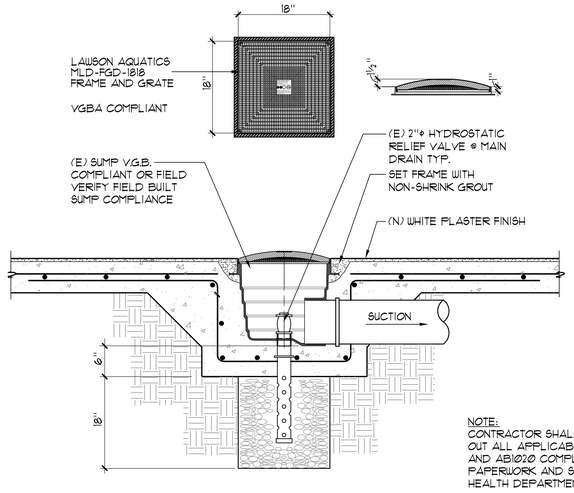

NOTE:
CONTRACTOR SHALL FILL OUT ALL APPLICABLE VGBA AND ABI900 COMPLIANCE PAPERWORK AND SUBMIT TO HEALTH DEPARTMENT.

8 **MAIN DRAIN** 1" = 1'-0"

PBK
BERKELEY
2600 TENTH STREET, SUITE 700
BERKELEY, CA 94710-2597
510-450-1999 P

HONEYBEE POOL RENOVATION

CITY OF ROHNERT PARK
1170 GOLF COURSE DRIVE
ROHNERT PARK, CA 94928

LICENSED ARCHITECT
GREGORY S. SMITH
C-35802
REN. 07/31/23
STATE OF CALIFORNIA

CONSULTANT
AQUATIC DESIGN GROUP
2226 Faraday Ave. Carlsbad, CA 92008
Aquatic@DesignGroup.com
760.438.8400

VANESSA GARRETT P.E. CE84141 — DATE
CITY ENGINEER

REVISION SCHEDULE			
NO	DATE	BY	DESCRIPTION
1	11/03/2022		AGENCY PLAN REVIEW
2	12/02/2022		AGENCY PLAN REVIEW

DRAWN:	NMV	CHECKED:	GSF
DATE: 02/25/2022		SCALE: AS NOTED	
PROJECT NUMBER: 2010200			

DETAILS

DRAWING NUMBER: SP-3

PLOT DATE: 11/29/2022 1:17 PM

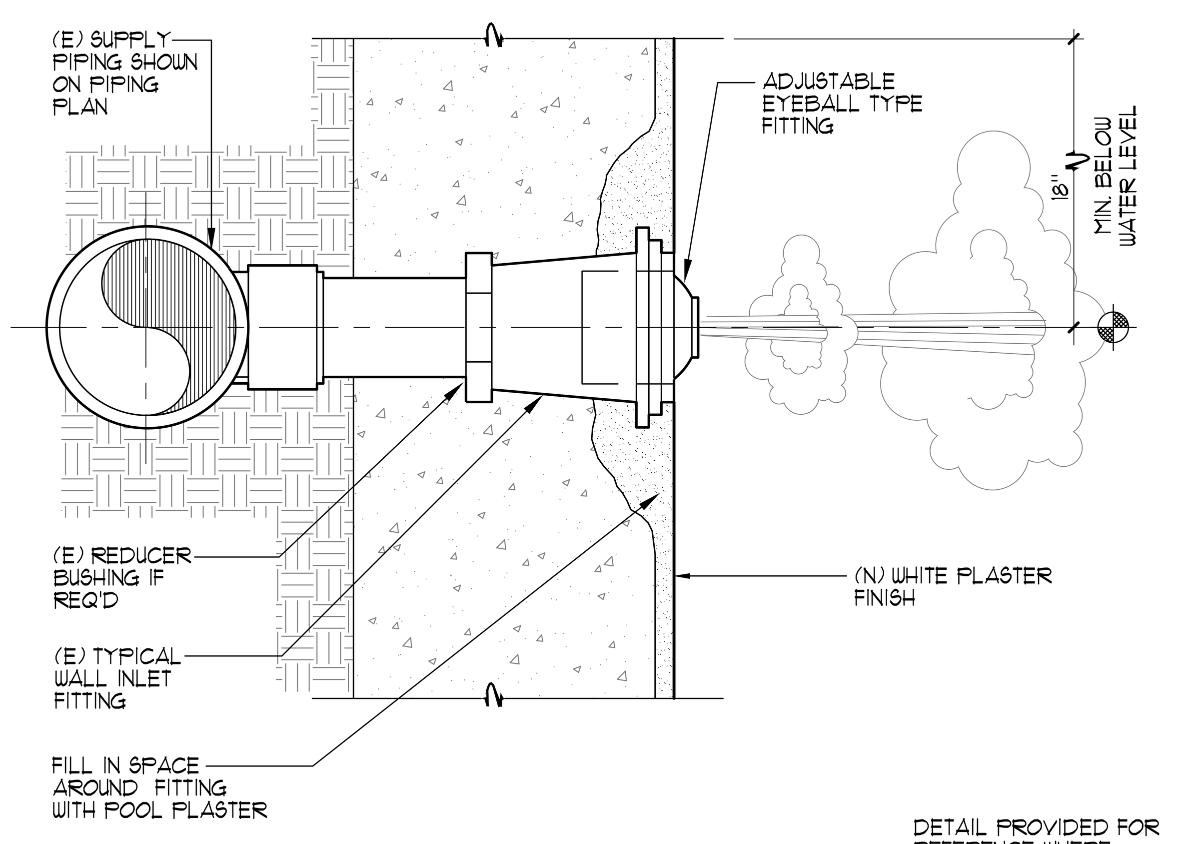

DETAIL PROVIDED FOR REFERENCE WHERE REPLACEMENT IS NEEDED.

1 **WALL INLET** NO SCALE

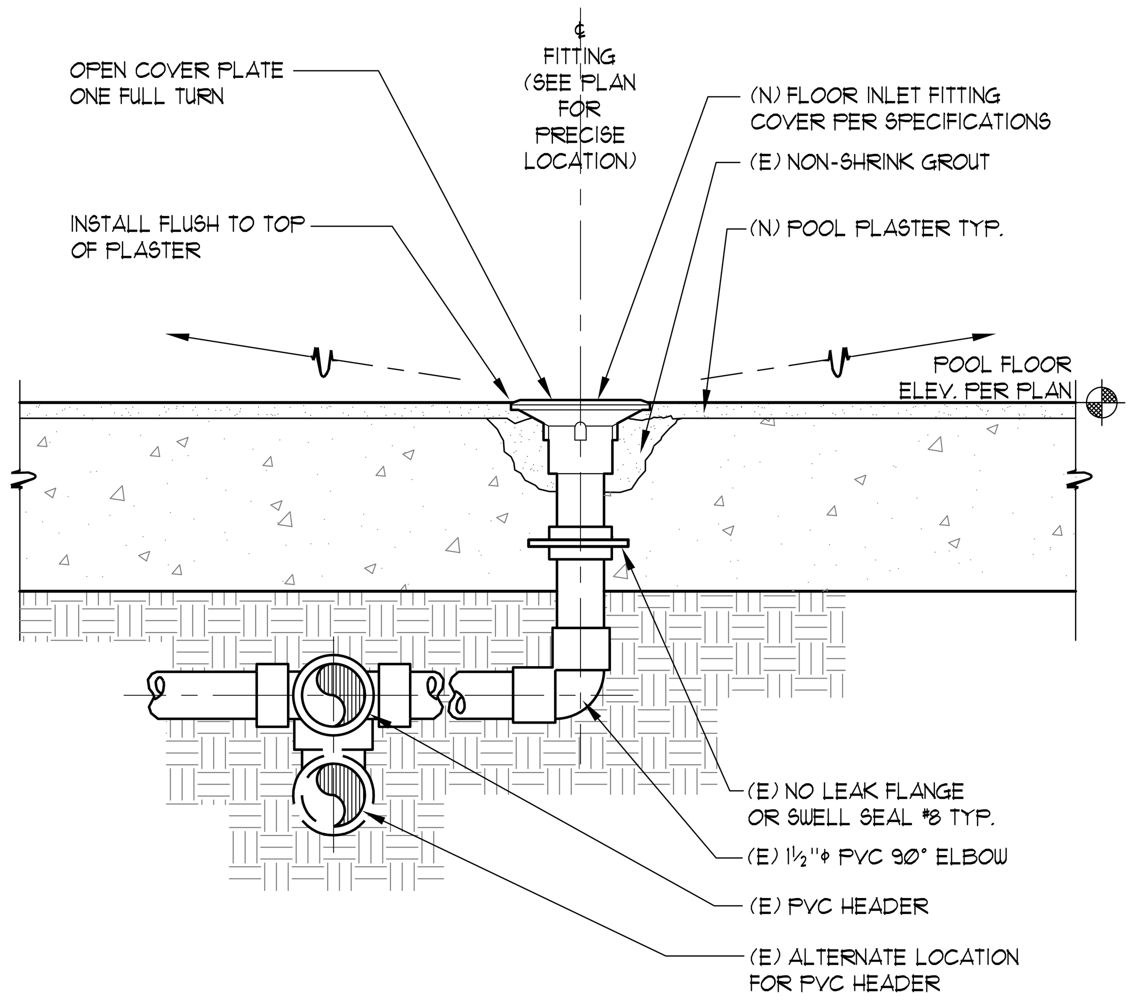

2 **FLOOR INLET** 3"=1'-0"

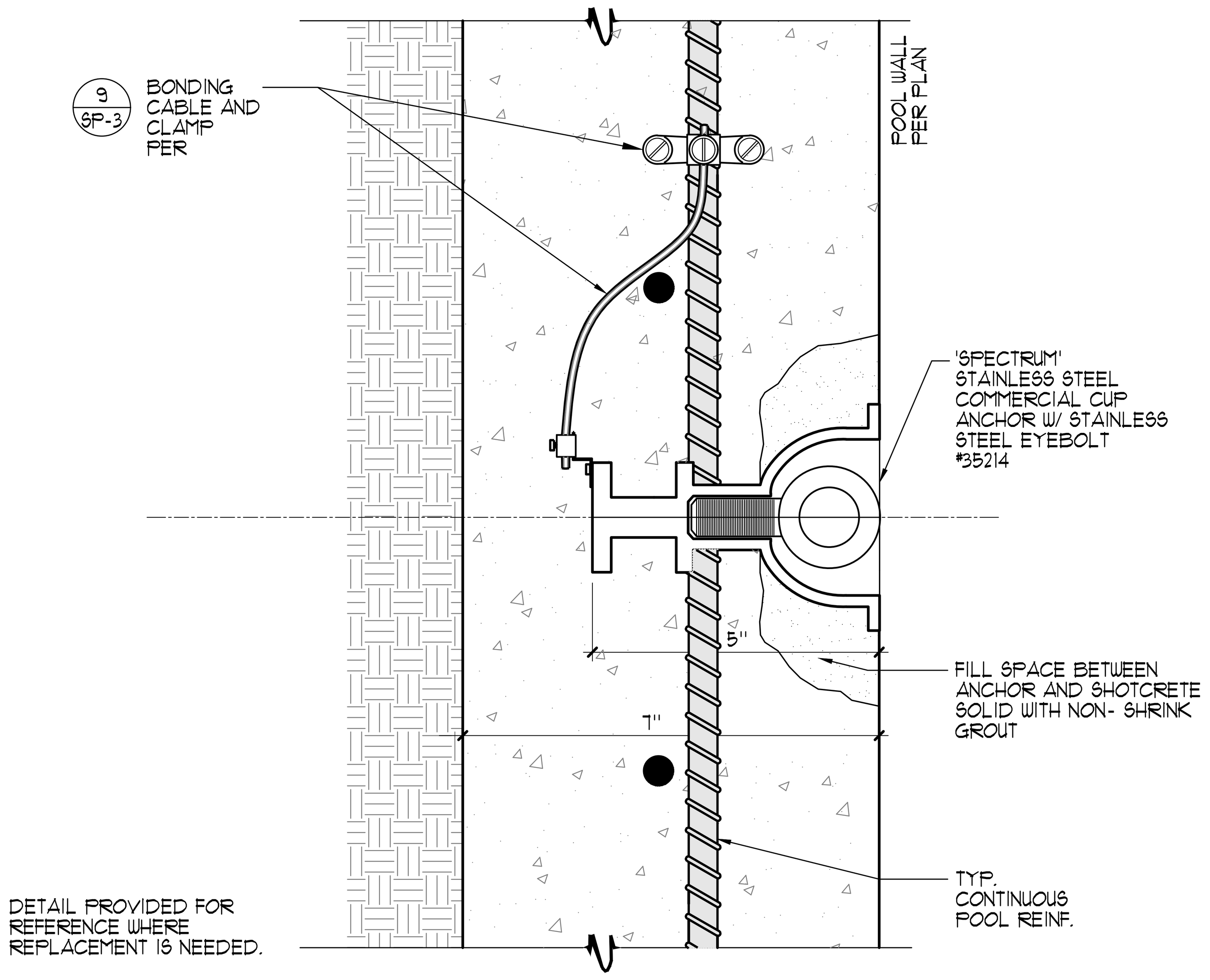

DETAIL PROVIDED FOR REFERENCE WHERE REPLACEMENT IS NEEDED.

3 **CUP ANCHOR** ½" = 1"

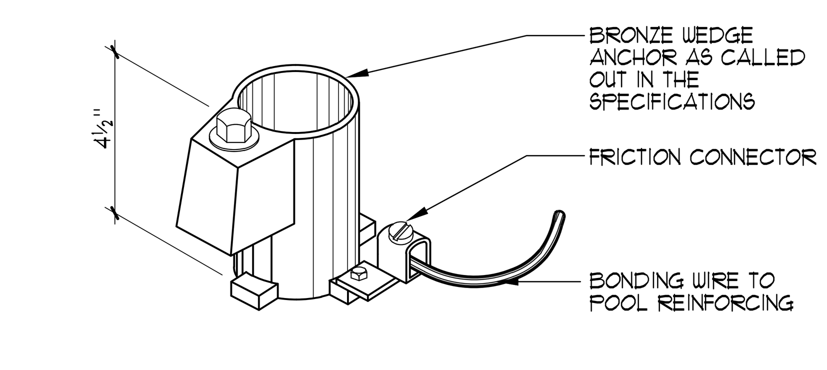

WEDGE ANCHOR
NO SCALE

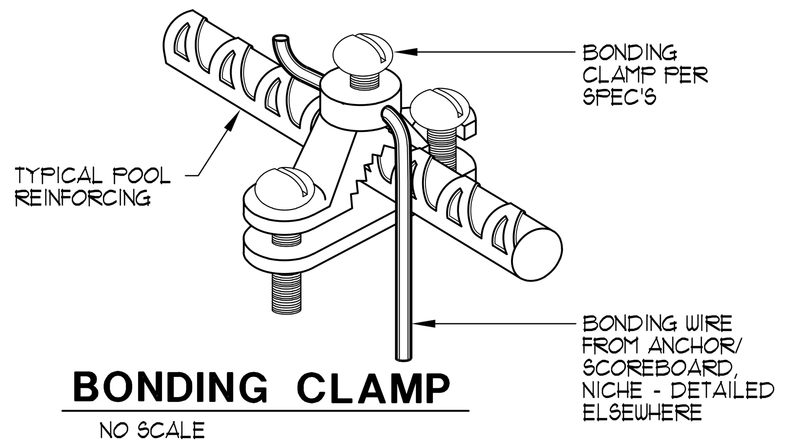

BONDING CLAMP
NO SCALE

4 **BONDING DETAILS** AS NOTED

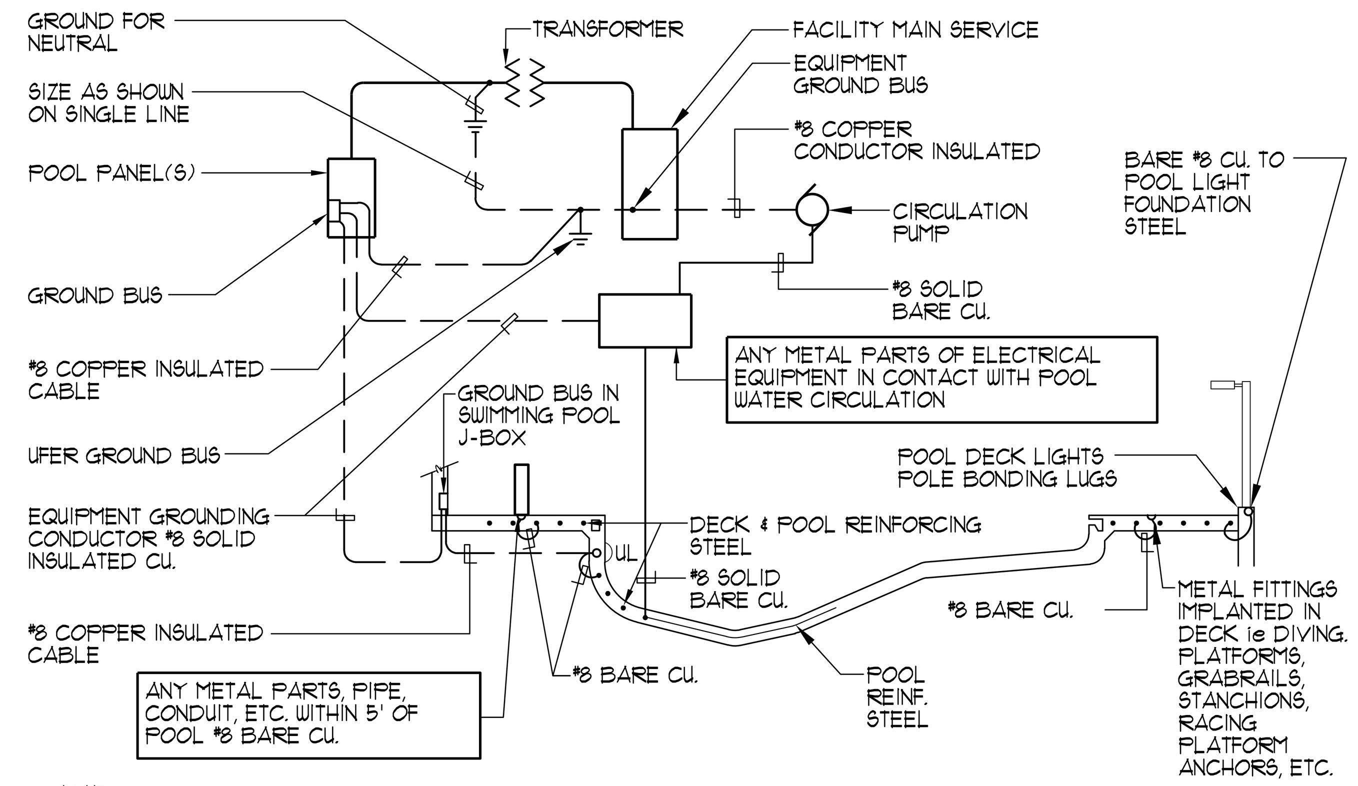

NOTE:

1. STRUCTURAL STEEL IN POOL DECK AND POOL SHALL BE BONDED TOGETHER (TIGHTLY MADE STEEL TIE-WIRES ARE APPROVED FOR BONDING STRUCTURAL ELEMENTS).
2. BONDING CONNECTOR TO COMMON GRID. (POOL STEEL MAY BE USED FOR THAT PURPOSE) SHALL BE MADE BY PRESSURE CONNECTORS OR CLAMPS OF BRASS, COPPER, OR COPPER ALLOY.
3. ALL GROUND BUSES SHALL BE SIZED FOR CONNECTION TO AWG SIZE 8 WIRE PROVIDING ONE SPARE TERMINAL.
4. GROUND AND BOND IN ACCORDANCE WITH ARTICLE 680 OF THE NATIONAL ELECTRICAL CODE. ie. LADDERS, FENCING, POLE LIGHTS, DIVING & STARTING STANCHIONS, HANDICAP HOIST ETC.
5. PROVIDE BONDING OF AUTOMATIC POOL COVER MOTORS REGARDLESS OF PROXIMITY TO POOL.

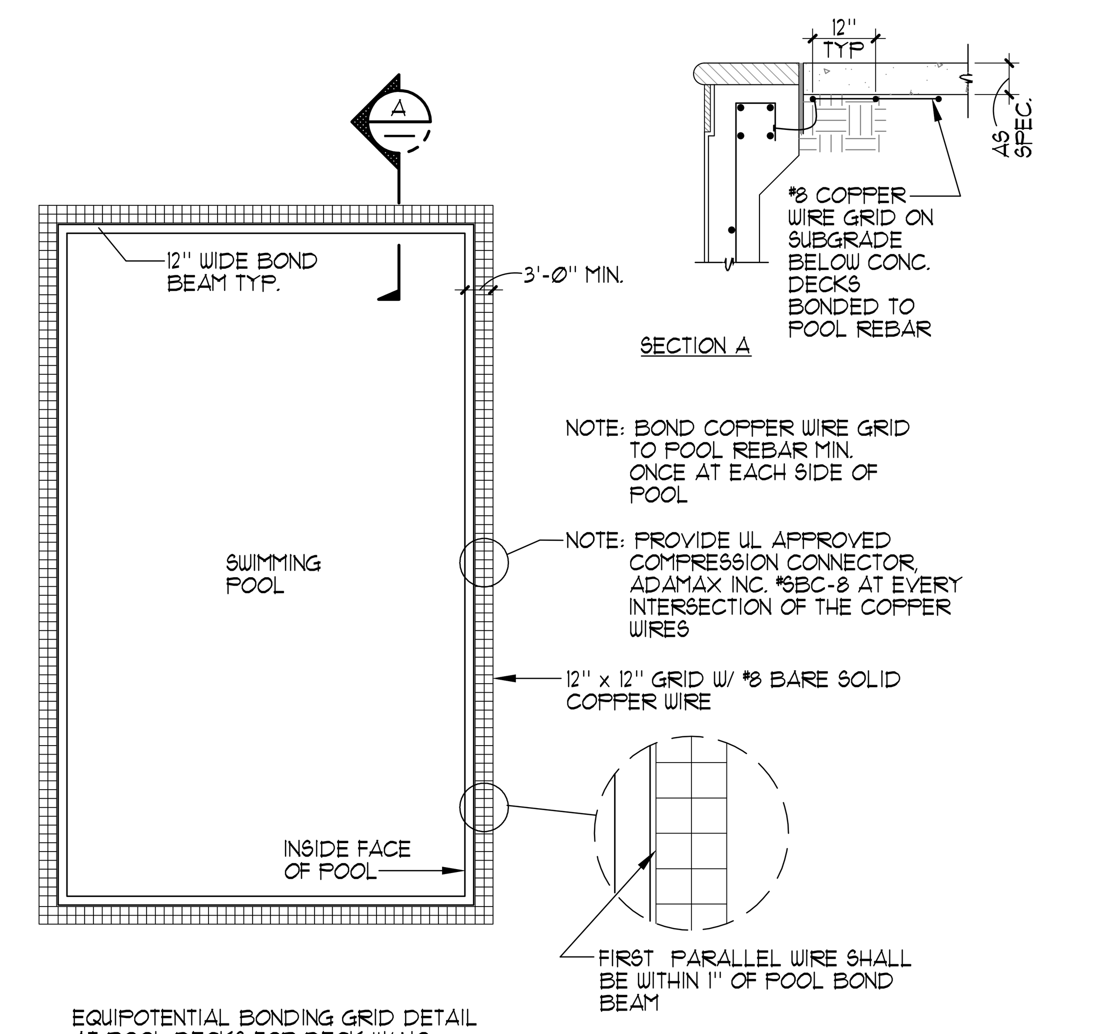

EQUIPOTENTIAL BONDING GRID DETAIL AT POOL DECKS FOR DECK W/ NO METALLIC REBAR. PER 2016 CEC AND 2017 NEC, ARTICLE 680.26

5 **TYPICAL POOL BONDING AND GROUND DETAIL** NO SCALE

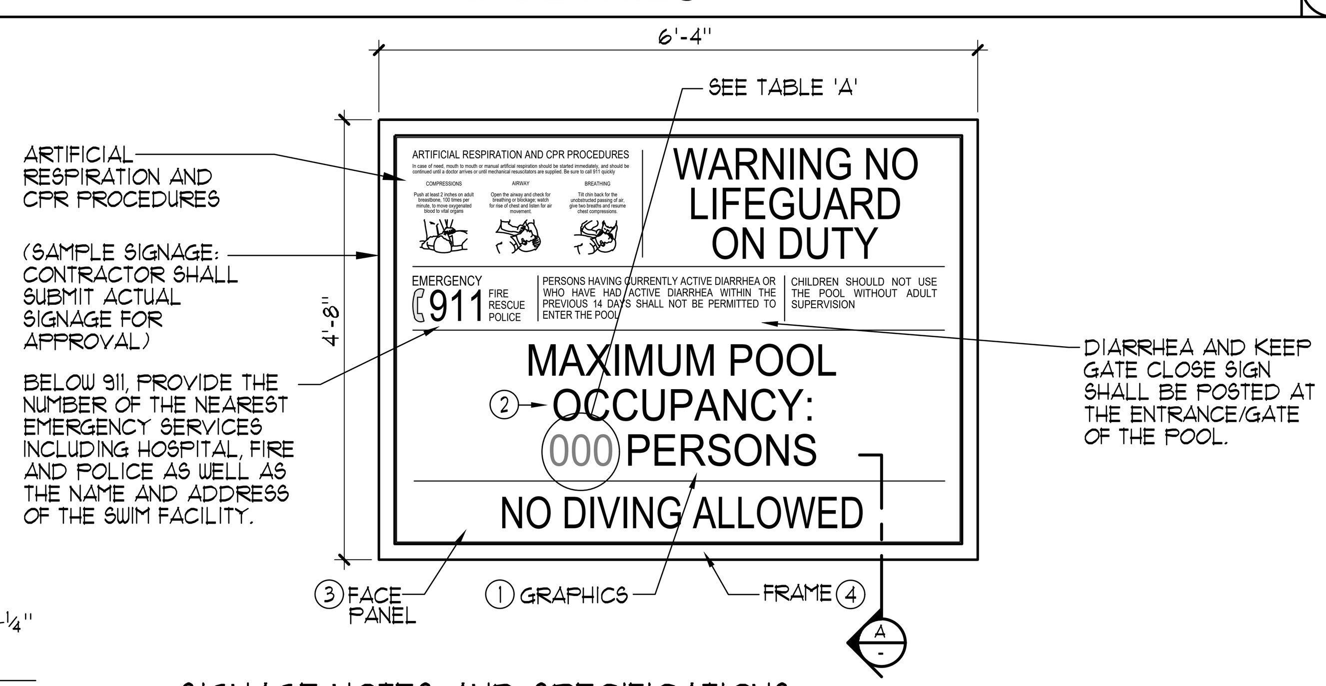

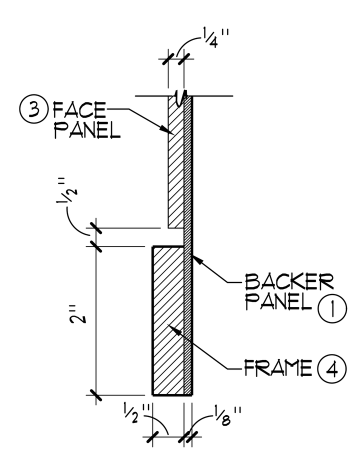

A **SECTION**
6" = 1'-0"

SIGNAGE NOTES AND SPECIFICATIONS:

① ⅛" THICK PAINTED ALUMINUM BACKER PANEL.

② SILKSCREENED COPY/GRAPHICS WITH SATIN CLEAR COAT.

③ ¼" THICK PAINTED ALUMINUM FACE PANEL WITH SILKSCREENED COPY/GRAPHICS. ATTACH TO ⅛" THICK PAINTED ALUMINUM BACKER PANEL USING 'VHB' TAPE AND SILICONE ADHESIVE.

④ 2" WIDE x ½" THICK PAINTED ALUMINUM SIGN FRAME ADHERED TO ⅛" THICK PAINTED ALUMINUM BACKER USING 'LORDS' ADHESIVE AS REQUIRED. VERTICAL SECTIONS OF FRAME TO BE RECTANGULAR TUBE. FILL AND SAND SEAM ALONG EDGE AND FACE PRIOR TO PAINTING.

TABLE 'A'

POOL TYPE	OCCUPANCY LOAD AT 1:20
SWIMMING POOL	217

NOTES:

1. COORDINATE SIGNAGE PLACEMENT AND COLOR SCHEME WITH ARCHITECT/OWNER PRIOR TO INSTALLATION.
2. CONTRACTOR TO PROVIDE SHOP DRAWINGS OF PROPOSED SIGNAGE AND MOUNTING DETAIL FOR REVIEW.

REQUIRED SIGNAGE:

1. ALL SIGNS SHALL HAVE CLEARLY LEGIBLE LETTERS OR NUMBERS NOT LESS THAN 4 INCHES HIGH, UNLESS OTHERWISE NOTED; AFFIXED TO A WALL, POLE, GATE, OR SIMILAR PERMANENT STRUCTURE IN A LOCATION VISIBLE TO ALL POOL USERS.
   A. POOL USER CAPACITY SIGN; A SIGN SHALL INDICATE THE MAXIMUM NUMBER OF POOL USERS PERMITTED FOR EACH POOL.
   B. NO DIVING SIGN; SIGNS SHALL BE POSTED IN CONSPICUOUS PLACES AND SHALL STATE 'NO DIVING' AT POOLS WITH A MAXIMUM WATER DEPTH OF 6 FEET OR LESS.
   C. NO LIFEGUARD SIGN; WHERE NO LIFEGUARD SERVICE IS PROVIDED, A WARNING SIGN SHALL BE POSTED STATING, "NO LIFEGUARD ON DUTY." THE SIGN ALSO SHALL STATE IN LETTERS AT LEAST 1 INCH HIGH, "CHILDREN SHOULD NOT USE POOL WITHOUT ADULT SUPERVISION."
   D. ARTIFICIAL RESPIRATION AND CPR SIGN; AN ILLUSTRATED DIAGRAM WITH TEXT AT LEAST ¼ INCH HIGH OF ARTIFICIAL RESPIRATION AND CPR PROCEDURES SHALL BE POSTED.
   E. EMERGENCY SIGN; THE EMERGENCY TELEPHONE NUMBER 911, THE NUMBER OF THE NEAREST EMERGENCY SERVICES AND THE NAME AND STREET ADDRESS OF THE POOL FACILITY SHALL BE POSTED.
   F. WARNING SIGN FOR A SPA POOL; A WARNING SIGN FOR THE SPA POOLS SHALL BE POSTED STATING, "CAUTION" AND SHALL INCLUDE THE FOLLOWING LANGUAGE IN LETTERS AT LEAST 1 INCH HIGH:
      1. ELDERLY PERSONS, PREGNANT WOMEN, INFANTS AND THOSE WITH HEALTH CONDITIONS REQUIRING MEDICAL CARE SHOULD CONSULT WITH A PHYSICIAN BEFORE ENTERING THE SPA.
      2. CHILDREN SHOULD NOT USE SPA WITHOUT ADULT SUPERVISION.
      3. HOT WATER IMMERSION WHILE UNDER THE INFLUENCE OF ALCOHOL, NARCOTICS, DRUGS, OR MEDICINES MAY LEAD TO SERIOUS CONSEQUENCES AND IS NOT RECOMMENDED.
      4. DO NOT USE ALONE.
      5. LONG EXPOSURE MAY RESULT IN HYPERTHERMIA, NAUSEA, DIZZINESS OR FAINTING.
   G. EMERGENCY SHUT OFF; IN LETTERS AT LEAST ONE INCH HIGH A SIGN SHALL BE POSTED AT THE SPA EMERGENCY SHUT OFF SWITCH STATING "EMERGENCY SHUT OFF SWITCH."
   H. NO USE AFTER DARK; WHERE POOLS WERE CONSTRUCTED FOR WHICH LIGHTING WAS NOT REQUIRED A SIGN SHALL BE POSTED AT EACH POOL ENTRANCE ON THE OUTSIDE OF THE GATE(S) STATING, "NO USE OF POOL ALLOWED AFTER DARK."
   I. KEEP CLOSED; A SIGN SHALL BE POSTED ON THE EXTERIOR SIDE OF GATES AND DOORS LEADING INTO THE POOL ENCLOSURE AREA STATING, "KEEP CLOSED."
   J. DIARRHEA; A SIGN IN LETTERS AT LEAST 1 INCH HIGH AND IN A LANGUAGE OR DIAGRAM THAT IS CLEARLY STATED SHALL BE POSTED AT THE ENTRANCE AREA OF A PUBLIC POOL WHICH STATES THAT PERSONS HAVING CURRENTLY ACTIVE DIARRHEA OR WHO HAVE HAD ACTIVE DIARRHEA WITHIN THE PREVIOUS 14 DAYS SHALL NOT BE ALLOWED TO ENTER THE POOL WATER.
2. DIRECTION OF FLOW SIGNAGE AND LABELS.
   A. THE DIRECTION OF FLOW FOR THE RECIRCULATION EQUIPMENT SHALL BE LABELED CLEARLY WITH DIRECTIONAL SYMBOLS SUCH AS ARROWS ON ALL PIPING IN THE EQUIPMENT AREA.
   B. WHERE THE RECIRCULATION EQUIPMENT FOR MORE THAN ONE POOL IS LOCATED ON SITE, THE EQUIPMENT SHALL BE MARKED AS TO WHICH POOL THE SYSTEM SERVES.
   C. VALVES AND PLUMBING LINES SHALL BE LABELED CLEARLY WITH THE SOURCE OR DESTINATION DESCRIPTIONS.

6 **POOL SIGNAGE DETAIL** ¾"=1'-0"

PLOT DATE: 11/29/2022 1:15 PM

PBK
BERKELEY
2600 TENTH STREET, SUITE 700
BERKELEY, CA 94710-2597
510-450-1999 P

HONEYBEE POOL RENOVATION

CITY OF ROHNERT PARK
1170 GOLF COURSE DRIVE
ROHNERT PARK, CA 94928

LICENSED ARCHITECT GREGORY S. FERRALL C-35802 REN. 07/31/23 STATE OF CALIFORNIA

CONSULTANT
AQUATIC DESIGN GROUP
2226 Faraday Ave. Carlsbad, CA 92008
AquaticDesignGroup.com
760.438.8400

VANESSA GARRETT P.E. CE84141 CITY ENGINEER — DATE

REVISION SCHEDULE

NO	DATE	BY	DESCRIPTION
1	11/03/2022		AGENCY PLAN REVIEW
2	12/02/2022		AGENCY PLAN REVIEW

DRAWN: NMV	CHECKED: GSF
DATE: 02/25/2022	SCALE: AS NOTED
PROJECT NUMBER: 2010200	

DETAILS

DRAWING NUMBER: SP-4

2019 CALIFORNIA GREEN BUILDING STANDARDS CODE
NONRESIDENTIAL MANDATORY MEASURES, SHEET 1 (July 2021, Includes July 2021 Supplement)

Y = YES
N/A = NOT APPLICABLE
RESPON. PARTY = RESPONSIBLE PARTY (ie: ARCHITECT, ENGINEER, OWNER, CONTRACTOR, INSPECTOR ETC.)

CHAPTER 3
GREEN BUILDING
SECTION 301 GENERAL

301.1 SCOPE. Buildings shall be designed to include the green building measures specified as mandatory in the application checklists contained in this code. Voluntary green building measures are also included in the application checklists and may be included in the design and construction of structures covered by this code, but are not required unless adopted by a city, county, or city and county as specified in Section 101.7.

301.3 NONRESIDENTIAL ADDITIONS AND ALTERATIONS. [BSC-CG] The provisions of individual sections of Chapter 5 apply to newly constructed buildings, building additions of 1,000 square feet or greater, and/or building alterations with a permit valuation of $200,000 or above (for occupancies within the authority of California Building Standards Commission). Code sections relevant to additions and alterations shall only apply to the portions of the building being added or altered within the scope of the permitted work.

A code section will be designated by a banner to indicate where the code section only applies to newly constructed buildings [N] or to additions and/or alterations [A]. When the code section applies to both, no banner will be used.

301.3.1 Nonresidential additions and alterations that cause updates to plumbing fixtures only:

Note: On and after January 1, 2014, certain commercial real property, as defined in Civil Code Section 1101.3, shall have its noncompliant plumbing fixtures replaced with appropriate water-conserving plumbing fixtures under specific circumstances. See Civil Code Section 1101.1 *et seq.* for definitions, types of commercial real property affected, effective dates, circumstances necessitating replacement of noncompliant plumbing fixtures, and duties and responsibilities for ensuring compliance.

301.3.2 Waste Diversion. The requirements of Section 5.408 shall be required for additions and alterations whenever a permit is required for work.

301.4 PUBLIC SCHOOLS AND COMMUNITY COLLEGES. (see GBSC)
301.5 HEALTH FACILITIES. (see GBSC)

SECTION 302 MIXED OCCUPANCY BUILDINGS

302.1 MIXED OCCUPANCY BUILDINGS. In mixed occupancy buildings, each portion of a building shall comply with the specific green building measures applicable to each specific occupancy.

SECTION 303 PHASED PROJECTS

303.1 PHASED PROJECTS. For shell buildings and others constructed for future tenant improvements, only those code measures relevant to the building components and systems considered to be new construction (or newly constructed) shall apply.

303.1.1 Initial Tenant Improvements. The provisions of this code shall apply only to the initial tenant improvements to a project. Subsequent tenant improvements shall comply with the scoping provisions in Section 301.3 non-residential additions and alterations.

ABBREVIATION DEFINITIONS:

HCD	Department of Housing and Community Development
BSC	California Building Standards Commission
DSA-SS	Division of the State Architect, Structural Safety
OSHPD	Office of Statewide Health Planning and Development
LR	Low Rise
HR	High Rise
AA	Additions and Alterations
N	New

CHAPTER 5
NONRESIDENTIAL MANDATORY MEASURES

DIVISION 5.1 PLANNING AND DESIGN

SECTION 5.101 GENERAL
5.101.1 SCOPE
The provisions of this chapter outline planning, design and development methods that include environmentally responsible site selection, building design, building siting and development to protect, restore and enhance the environmental quality of the site and respect the integrity of adjacent properties.

SECTION 5.102 DEFINITIONS
5.102.1 DEFINITIONS
The following terms are defined in Chapter 2 *(and are included here for reference)*

CUTOFF LUMINAIRES. Luminaires whose light distribution is such that the candela per 1000 lamp lumens does not numerically exceed 25 (2.5 percent) at an angle of 90 degrees above nadir, and 100 (10 percent) at a vertical angle of 80 degrees above nadir. This applies to all lateral angles around the luminaire.

LOW-EMITTING AND FUEL EFFICIENT VEHICLES.
Eligible vehicles are limited to the following:

1. Zero emission vehicle (ZEV), including neighborhood electric vehicles (NEV), partial zero emission vehicle (PZEV), advanced technology PZEV (AT ZEV) or CNG fueled (original equipment manufacturer only) regulated under Health and Safety Code section 43800 and CCR, Title 13, Sections 1961 and 1962.
2. High-efficiency vehicles, regulated by U.S. EPA, bearing High-Occupancy Vehicle (HOV) car pool lane stickers issued by the Department of Motor Vehicles.

NEIGHBORHOOD ELECTRIC VEHICLE (NEV). A motor vehicle that meets the definition of "low-speed vehicle" either in Section 385.5 of the Vehicle Code or in 49CFR571.500 (as it existed on July 1, 2000), and is certified to zero-emission vehicle standards.

TENANT-OCCUPANTS. Building occupants who inhabit a building during its normal hours of operation as permanent occupants, such as employees, as distinguished from customers and other transient visitors.

VANPOOL VEHICLE. Eligible vehicles are limited to any motor vehicle, other than a motortruck or truck tractor, designed for carrying more than 10 but not more than 15 persons including the driver, which is maintained and used primarily for the nonprofit work-related transportation of adults for the purpose of ridesharing.

Note: Source: Vehicle Code, Division 1, Section 668

ZEV. Any vehicle certified to zero-emission standards.

SECTION 5.106 SITE DEVELOPMENT
5.106.1 STORM WATER POLLUTION PREVENTION FOR PROJECTS THAT DISTURB LESS THAN ONE ACRE OF LAND. Newly constructed projects and additions which disturb less than one acre of land, and are not part of a larger common plan of development or sale, shall prevent the pollution of storm water runoff from the construction activities through one or more of the following measures:

5.106.1.1 Local ordinance. Comply with a lawfully enacted storm water management and/or erosion control ordinance.

5.106.1.2 Best Management Practices (BMPs). Prevent the loss of soil through wind or water erosion by implementing an effective combination of erosion and sediment control and good housekeeping BMPs.

1. Soil loss BMPs that should be considered for implementation as appropriate for each project include, but are not limited to, the following:
   a. Scheduling construction activity during dry weather, when possible.
   b. Preservation of natural features, vegetation, soil, and buffers around surface waters.
   c. Drainage swales or lined ditches to control stormwater flow.
   d. Mulching or hydroseeding to stabilize disturbed soils.
   e. Erosion control to protect slopes.
   f. Protection of storm drain inlets (gravel bags or catch basin inserts).
   g. Perimeter sediment control (perimeter silt fence, fiber rolls).
   h. Sediment trap or sediment basin to retain sediment on site.
   i. Stabilized construction exits.
   j. Wind erosion control.
   k. Other soil loss BMPs acceptable to the enforcing agency.
2. Good housekeeping BMPs to manage construction equipment, materials, non-stormwater discharges and wastes that should be considered for implementation as appropriate for each project include, but are not limited to, the following:
   a. Dewatering activities.
   b. Material handling and waste management.
   c. Building materials stockpile management.
   d. Management of washout areas (concrete, paints, stucco, etc.).
   e. Control of vehicle/equipment fueling to contractor's staging area.
   f. Vehicle and equipment cleaning performed off site.
   g. Spill prevention and control.
   h. Other housekeeping BMPs acceptable to the enforcing agency.

5.106.2 STORMWATER POLLUTION PREVENTION FOR PROJECTS THAT DISTURB ONE OR MORE ACRES OF LAND. Comply with all lawfully enacted stormwater discharge regulations for projects that (1) disturb one acre or more of land, or (2) disturb less than one acre of land but are part of a larger common plan of development sale.

Note: Projects that (1) disturb one acre or more of land, or (2) disturb less than one acre of land but are part of the larger common plan of development or sale must comply with the post-construction requirements detailed in the applicable National Pollutant Discharge Elimination System (NPDES) General permit for Stormwater Discharges Associated with Construction and Land Disturbance Activities issued by the State Water Resources Control Board or the Lahontan Regional Water Quality Control Board (for projects in the Lake Tahoe Hydrologic Unit).

The NPDES permits require postconstruction runoff (post-project hydrology) to match the preconstruction runoff (pre-project hydrology) with the installation of postconstruction stormwater management measures. The NPDES permits emphasize runoff reduction through on-site stormwater use, interception, evapotranspiration, and infiltration through nonstructural controls, such as Low Impact Development (LID) practices, and conversation design measures. Stormwater volume that cannot be addressed using nonstructural practices is required to be captured in structural practices and be approved by the enforcing agency.

Refer to the current applicable permits on the State Water Resources Control Board website at: www.waterboards.ca.gov/constructionstormwater. Consideration to the stormwater runoff management measures should be given during the initial design process for appropriate integration into site development.

5.106.4 BICYCLE PARKING. For buildings within the authority of California Building Standards Commission as specified in Section 103, comply with Section 5.106.4.1. For buildings within the authority of the Division of the State Architect pursuant to Section 105, comply with Section 5.106.4.2

5.106.4.1 Bicycle parking. [BSC-CG] Comply with Sections 5.106.4.1.1 and 5.106.4.1.2; or meet the applicable local ordinance, whichever is stricter.

5.106.4.1.1 Short-term bicycle parking. If the new project or an addition or alteration is anticipated to generate visitor traffic, provide permanently anchored bicycle racks within 200 feet of the visitors' entrance, readily visible to passers-by, for 5% of new visitor motorized vehicle parking spaces being added, with a minimum of one two-bike capacity rack.
Exception: Additions or alterations which add nine or less visitor vehicular parking spaces.

5.106.4.1.2 Long-term bicycle parking. For new buildings with tenant spaces that have 10 or more tenant-occupants, provide secure bicycle parking for 5 percent of the tenant-occupant vehicular parking spaces with a minimum of one bicycle parking facility.

5.106.4.1.3 For additions or alterations that add 10 or more tenant-occupant vehicular parking spaces, provide secure bicycle parking for 5 percent of the tenant vehicular parking spaces being added, with a minimum of one bicycle parking facility.

5.106.4.1.4 For new shell buildings in phased projects provide secure bicycle parking for 5 percent of the anticipated tenant-occupant vehicular parking spaces with a minimum of one bicycle parking facility.

5.106.4.1.5 Acceptable bicycle parking facility for Sections 5.106.4.1.2, 5.106.4.1.3, and 5.106.4.1.4 shall be convenient from the street and shall meet one of the following:

1. Covered, lockable enclosures with permanently anchored racks for bicycles;
2. Lockable bicycle rooms with permanently anchored racks; or
3. Lockable, permanently anchored bicycle lockers.

Note: Additional information on recommended bicycle accommodations may be obtained from Sacramento Area Bicycle Advocates.

5.106.4.2 Bicycle parking. [DSA-SS] For public schools and community colleges, comply with Sections 5.106.4.2.1 and 5.106.4.2.2

5.106.4.2.1 Student bicycle parking. Provide permanently anchored bicycle racks conveniently accessed with a minimum of four two-bike capacity racks per new building.
5.106.4.2.2 Staff bicycle parking. Provide permanent, secure bicycle parking conveniently accessed with a minimum of two staff bicycle parking spaces per new building. Acceptable bicycle parking facilities shall be convenient from the street or staff parking area and shall meet one of the following:

1. Covered, lockable enclosures with permanently anchored racks for bicycles;
2. Lockable bicycle rooms with permanently anchored racks; or
3. Lockable, permanently anchored bicycle lockers.

5.106.5.2 DESIGNATED PARKING FOR CLEAN AIR VEHICLES. In new projects or additions or alterations that add 10 or more vehicular parking spaces, provide designated parking for any combination of low-emitting, fuel-efficient and carpool/van pool vehicles as follows:

TABLE 5.106.5.2 - PARKING

TOTAL NUMBER OF PARKING SPACES	NUMBER OF REQUIRED SPACES
0-9	0
10-25	3
25-50	6
51-75	9
76-100	12
101-150	18
151-200	21
201 AND OVER	AT LEAST 12% OF TOTAL[1]

1.Calculation for spaces shall be rounded up to the nearest whole number.

Note: Designated parking for clean air vehicles shall count towards the total parking spaces required by the local enforcing agencies.

5.106.5.2.1 - Parking stall marking. Paint, in the paint used for stall striping, the following characters such that the lower edge of the last word aligns with the end of the stall striping and is visible beneath a parked vehicle: CLEAN AIR / VAN POOL / EV

Note: Vehicles bearing Clean Air Vehicle stickers from expired HOV lane programs may be considered eligible for designated parking spaces.

5.106.5.3 Electric vehicle (EV) charging. [N] Construction shall comply with Section 5.106.5.3.1 or Section 5.106.5.3.2 to facilitate future installation of electric vehicle supply equipment (EVSE). When EVSE(s) is/are installed, it shall be in accordance with the California Building Code, the California Electrical Code and as follows:

5.106.5.3.1 Single charging space requirements. [N] When only a single charging space is required per Table 5.106.5.3.3, a raceway is required to be installed at the time of construction and shall be installed in accordance with the California Electrical Code. Construction plans and specifications shall include, but are not limited to, the following:

1. The type and location of the EVSE.
2. A listed raceway capable of accommodating a 208/240 -volt dedicated branch circuit.
3. The raceway shall not be less than trade size 1".
4. The raceway shall originate at a service panel or a subpanel serving the area, and shall terminate in close proximity to the proposed location of the charging equipment and listed suitable cabinet, box, enclosure or equivalent.
5. The service panel or subpanel shall have sufficient capacity to accommodate a minimum 40-ampere dedicated branch circuit for the future installation of the EVSE.

5.106.5.3.2 Multiple charging space requirements. [N] When multiple charging spaces are required per Table 5.106.5.3.3 raceway(s) is/are required to be installed at the time of construction and shall be installed in accordance with the California Electrical Code. Construction plans and specifications shall include, but are not limited to, the following:

1. The type and location of the EVSE.
2. The raceway(s) shall originate at a service panel or a subpanel(s) serving the area, and shall terminate in close proximity to the proposed location of the charging equipment and into listed suitable cabinet(s), box(es), enclosure(s) or equivalent.
3. Plan design shall be based upon 40-ampere minimum branch circuits.
4. Electrical calculations shall substantiate the design of the electrical system, to include the rating of equipment and any on-site distribution transformers and have sufficient capacity to simultaneously charge all required EVs at its full rated amperage.
5. The service panel or subpanel(s) shall have sufficient capacity to accommodate the required number of dedicated branch circuit(s) for the future installation of the EVSE.

5.106.5.3.3 EV charging space calculations. [N] Table 5.106.5.3.3 shall be used to determine if single or multiple charging space requirements apply for the future installation of EVSE.

Exceptions: On a case-by-case basis where the local enforcing agency has determined EV charging and infrastructure is not feasible based upon one or more of the following conditions:

1. Where there is insufficient electrical supply.
2. Where there is evidence suitable to the local enforcing agency substantiating that additional local utility infrastructure design requirements, directly related to the implementation of Section 5.106.5.3, may adversely impact the construction cost of the project.

TABLE 5.106.5.3.3

TOTAL NUMBER OF PARKING SPACES	NUMBER OF REQUIRED SPACES
0-9	0
10-25	2
26-50	4
51-75	7
76-100	9
101-150	13
151-200	18
201 AND OVER	10% of total[1]

1. Calculation for spaces shall be rounded up to the nearest whole number.

5.106.5.3.4 [N] Identification. The service panel or subpanel(s) circuit directory shall identify the reserved overcurrent protective device space(s) for future EV charging as "EV CAPABLE". The raceway termination location shall be permanently and visibly marked as "EV CAPABLE".

5.106.5.3.5 [N] Future charging spaces qualify as designated parking as described in Section 5.106.5.2 Designated parking for clean air vehicles.

Note: Future electric vehicle charging spaces shall count towards the total parking spaces required by the local enforcing agencies.

5.106.8 LIGHT POLLUTION REDUCTION. [N]. I Outdoor lighting systems shall be designed and installed to comply with the following:

1. The minimum requirements in the California Energy Code for Lighting Zones 0-4 as defined in Chapter 10, Section 10-114 of the California Administrative Code; and
2. Backlight (B) ratings as defined in IES TM-15-11 (shown in Table A-1 in Chapter 8);
3. Uplight and Glare ratings as defined in California Energy Code (shown in Tables 130.2-A and 130.2-B in Chapter 8) and
4. Allowable BUG ratings not exceeding those shown in Table 5.106.8, [N] or Comply with a local ordinance lawfully enacted pursuant to Section 101.7, whichever is more stringent.

Exceptions: [N]

1. Luminaires that qualify as exceptions in Sections 130.2 (b) and 140.7 of the California Energy Code.
2. Emergency lighting.
3. Building facade meeting the requirements in Table 140.7-B of the California Energy Code, Part 6.
4. Custom lighting features as allowed by the local enforcing agency, as permitted by Section 101.8 Alternate materials, designs and methods of construction.
5. Luminaires with less than 6,200 initial luminaire lumens.

TABLE 5.106.8 [N] MAXIMUM ALLOWABLE BACKLIGHT, UPLIGHT AND GLARE (BUG) RATINGS [1,2]

ALLOWABLE RATING	LIGHTING ZONE LZ0	LIGHTING ZONE LZ1	LIGHTING ZONE LZ2	LIGHTING ZONE LZ3	LIGHTING ZONE LZ4
MAXIMUM ALLOWABLE BACKLIGHT RATING [3]					
Luminaire greater than 2 mounting heights (MH) from property line	N/A	No Limit	No Limit	No Limit	No Limit
Luminaire back hemisphere is 1-2 MH from property line	N/A	B2	B3	B4	B4
Luminaire back hemisphere is 0.5-1 MH from property line	N/A	B1	B2	B3	B3
Luminaire back hemisphere is less than 0.5 MH from property line	N/A	B0	B0	B1	B2
MAXIMUM ALLOWABLE UPLIGHT RATING (U)					
For area lighting [3]	N/A	U0	U0	U0	U0
For all other outdoor lighting,including decorative luminaires	N/A	U1	U2	U3	UR
MAXIMUM ALLOWABLE GLARE RATING [3] **(G)**					
Luminaire greater than 2 MH from property line	N/A	G1	G2	G3	G4
Luminaire front hemisphere is 1-2 MH from property line	N/A	G0	G1	G1	G2
Luminaire front hemisphere is 0.5-1 MH from property line	N/A	G0	G0	G1	G1
Luminaire back hemisphere is less than 0.5 MH from property line	N/A	G0	G0	G0	G1

1. IESNA Lighting Zones 0 and 5 are not applicable; refer to Lighting Zones as defined in the *California Energy Code* and Chapter 10 of the *California Administrative Code*.

2. For property lines that abut public walkways, bikeways, plazas and parking lots, the property line may be considered to be 5 feet beyond the actual property line for purpose of determining compliance with this section. For property lines that abut public roadways and public transit corridors, the property line may be considered to be the centerline of the public roadway or public transit corridor for the purpose of determining compliance with this section.

3. General lighting luminaires in areas such as outdoor parking, sales or storage lots shall meet these reduced ratings. Decorative luminaries located in these areas shall meet *U*-value limits for "all other outdoor lighting"

5.106.8.1 Facing- Backlight
Luminaries within 2MH of a property line shall be oriented so that the nearest property line is behind the fixture, and shall comply with the backlight rating specified in Table 5.106.8 based on the lighting zone and distance to the nearest point of that property line.
Exception: Corners. If two property lines (or two segments of the same property line) have equidistant point to the luminaire, then the luminaire may be oriented so that the intersection of the two lines (the corner) is directly behind the luminaire. The luminaire shall still use the distance to the nearest points(s) on the property lines to determine the required backlight rating.

5.106.8.2 Facing-Glare.
For luminaires covered by 5.106.8.1, if a property line also exists within or extends into the front hemisphere within 2MH of the luminaire then the luminaire shall comply with the more stringent glare rating specified in Table 5.106.8 based on the lighting zone and distance to the nearest point on the nearest property line within the front hemisphere.

Note: [N]
1.See also *California Building Code*, Chapter 12, Section 1205.6 for college campus lighting requirements for parking facilities and walkways.
2.Refer to Chapter 8 (Compliance Forms, Worksheets and Reference Material) for IES TM-15-11 Table A-1, *California Energy Code* Tables 130.2-A and 130.2-B.
3. Refer to the *California Building Code* for requirements for additions and alterations.

PBK

5.106.10 GRADING AND PAVING. Construction plans shall indicate how site grading or a drainage system will manage all surface water flows to keep water from entering buildings. Examples of methods to manage surface water include, but are not limited to, the following:

1. Swales.
2. Water collection and disposal systems.
3. French drains.
4. Water retention gardens.
5. Other water measures which keep surface water away from buildings and aid in groundwater recharge.
   Exception: Additions and alterations not altering the drainage path.

5.106.12 SHADE TREES [DSA-SS]. Shade Trees shall be planted to comply with Sections 5.106.12.1, 5.106.12.2, and 5.106.12.3. Percentages shown shall be measured at noon on the summer solstice. Landscape irrigation necessary to establish and maintain tree health shall comply with Section 5.304.6.

5.106.12.1 Surface parking areas. Shade tree plantings, minimum #10 container size or equal, shall be installed to provide shade over 50 percent of the parking area within 15 years.

Exceptions: The surface parking area covered by solar photovoltaic shade structures, or shade structures, with roofing materials that comply with Table A5.106.11.2.2 in Appendix A5, are not included in the total area calculations.

5.106.12.2 Landscape areas. Shade tress plantings, minimum #10 container size or equal shall be installed to provide shade of 20% of the landscape area within 15 years.

Exceptions: Playfields for organized sport activity are not included in the total area calculation.

5.106.12.3. Hardscape areas. Shade tree plantings, minimum #10 container size or equal shall be installed to provide shade over 20 percent of the hardscape area within 15 years.

Exceptions: Walks, hardscape areas covered by solar photovoltaic shade structures, and hardscape areas covered by shade structures with roofing materials that comply with Table A5.106.11.2.2 in Appendix A5, are not included in the total area calculation.

DIVISION 5.2 ENERGY EFFICIENCY

SECTION 5.201 GENERAL
5.201.1 Scope [BSC-CG]. ***California Energy Code [DSA-SS].*** For the purposes of mandatory energy efficiency standards in this code, the California Energy Commission will continue to adopt mandatory building standards.

DIVISION 5.3 WATER EFFICIENCY AND CONSERVATION

SECTION 5.301 GENERAL
5.301.1 Scope. The provisions of this chapter shall establish the means of conserving water use indoors, outdoors and in wastewater conveyance.

SECTION 5.302 DEFINITIONS
5.302.1 Definitions. The following terms are defined in Chapter 2 *(and are included here for reference)*

EVAPOTRANSPIRATION ADJUSTMENT FACTOR (ETAF) [DSA-SS]. An adjustment factor when applied to reference evapotranspiration that adjusts for plant factors and irrigation efficiency, which ae two major influences on the amount of water that needs to be applied to the landscape.

FOOTPRINT AREA [DSA-SS]. The total area of the furthest exterior wall of the structure projected to natural grade, not including exterior areas such as stairs, covered walkways, patios and decks.

METERING FAUCET. A self-closing faucet that dispenses a specific volume of water for each actuation cycle. The volume or cycle duration can be fixed or adjustable.

GRAYWATER. Pursuant to Health and Safety Code Section 17922.12, "graywater" means untreated wastewater that has not been contaminated by any toilet discharge, has not been affected by infectious, contaminated, or unhealthy bodily wastes, and does not present a threat from contamination by unhealthful processing, manufacturing, or operating wastes. "Graywater" includes, but is not limited to wastewater from bathtubs, showers, bathroom washbasins, clothes washing machines and laundry tubs, but does not include waste water from kitchen sinks or dishwashers.

MODEL WATER EFFICIENT LANDSCAPE ORDINANCE (MWELO). The California ordinance regulating landscape design, installation and maintenance practices that will ensure commercial, multifamily and other developer installed landscapes greater than 2500 square feet meet an irrigation water budget developed based on landscaped area and climatological parameters.

MODEL WATER EFFICIENT LANDSCAPE ORDINANCE (MWELO). [HCD] The California model ordinance (California Code of Regulations, Title 23, Division 2, Chapter 2.7), regulating landscape design, installation and maintenance practices. Local agencies are required to adopt the updated MWELO, or adopt a local ordinance at least as effective as the MWELO.

POTABLE WATER. Water that is drinkable and meets the U.S. Environmental Protection Agency (EPA) Drinking Water Standards. See definition in the California Plumbing Code, Part 5.

POTABLE WATER. [HCD] Water that is satisfactory for drinking, culinary, and domestic purposes, and meets the U.S. Environmental Protection Agency (EPA) Drinking Water Standards and the requirements of the Health Authority Having Jurisdiction.

RECYCLED WATER. Water which, as a result of treatment of waste, is suitable for a direct beneficial use or a controlled use that would not otherwise occur [Water Code Section 13050 (n)]. Simply put, recycled water is water treated to remove waste matter attaining a quality that is suitable to use the water again.

SUBMETER. [HCD 1] A secondary device beyond a meter that measures water consumption of an individual rental unit within a multiunit residential structure or mixed-use residential and commercial structure. (See Civic Code Section 1954.202 (g) and Water code Section 517 for additional details.)

WATER BUDGET. Is the estimated total landscape irrigation water use which shall not exceed the maximum applied water allowance calculated in accordance with the Department of Water Resources Model Efficient Landscape Ordinance (MWELO).

SECTION 5.303 INDOOR WATER USE
5.303.1 METERS. Separate submeters or metering devices shall be installed for the uses described in Sections 503.1.1 and 503.1.2.

5.303.1.1 Buildings in excess of 50,000 square feet. Separate submeters shall be installed as follows:

1. For each individual leased, rented or other tenant space within the building projected to consume more than 100 gal/day (380 L/day), including, but not limited to, spaces used for laundry or cleaners, restaurant or food service, medical or dental office, laboratory, or beauty salon or barber shop.
2. Where separate submeters for individual building tenants are unfeasible, for water supplied to the following subsystems:
   a. Makeup water for cooling towers where flow through is greater than 500 gpm (30 L/s).
   b. Makeup water for evaporative coolers greater than 6 gpm (0.04 L/s).
   c. Steam and hot water boilers with energy input more than 500,000 Btu/h (147 kW).

5.303.1.2 Excess consumption. A separate submeter or metering device shall be provided for any tenant within a new building or within an addition that is projected to consume more than 1,000 gal/day.

PBK

5.303.3 WATER CONSERVING PLUMBING FIXTURES AND FITTINGS. Plumbing fixtures (water closets and urinals) and fittings (faucets and showerheads) shall comply with the following:

5.303.3.1 Water Closets. The effective flush volume of all water closets shall not exceed 1.28 gallons per flush. Tank-type water closets shall be certified to the performance criteria of the U.S. EPA WaterSense Specification for Tank-Type toilets.

Note: The effective flush volume of dual flush toilets is defined as the composite, average flush volume of two reduced flushes and one full flush.

5.303.3.2 Urinals.
5.303.3.2.1 Wall-mounted Urinals. The effective flush volume of wall-mounted urinals shall not exceed 0.125 gallons per flush.

5.303.3.2.2 Floor-mounted Urinals. The effective flush volume of floor-mounted or other urinals shall not exceed 0.5 gallons per flush.

5.303.3.3 Showerheads. [BSC-CG]
5.303.3.3.1 Single showerhead. Showerheads shall have a maximum flow rate of not more than 1.8 gallons per minute at 80 psi. Showerheads shall be certified to the performance criteria of the U.S. EPA WaterSense Specification for Showerheads.

5.303.3.3.2 Multiple showerheads serving one shower. When a shower is served by more than one showerhead, the combined flow rate of all the showerheads and/or other shower outlets controlled by a single valve shall not exceed 1.8 gallons per minute at 80 psi, or the shower shall be designed to allow only one shower outlet to be in operation at a time.
Note: A hand-held shower shall be considered a showerhead.

GBS-01

DISCLAIMER: *THIS DOCUMENT IS PROVIDED AND INTENDED TO BE USED AS A MEANS TO INDICATE AREAS OF COMPLIANCE WITH THE CALIFORNIA GREEN BUILDING STANDARDS (CALGREEN) CODE. DUE TO THE VARIABLES BETWEEN BUILDING DEPARTMENT JURISDICTIONS, THIS CHECKLIST IS TO BE USED ON AN INDIVIDUAL PROJECT BASIS AND MAY BE MODIFIED BY THE END USER TO MEET THOSE INDIVIDUAL NEEDS. THE END USER ASSUMES ALL RESPONSIBILITY ASSOCIATED WITH THE USE OF THIS DOCUMENT, INCLUDING VERIFICATION WITH THE FULL CODE.*

2019 CALIFORNIA GREEN BUILDING STANDARDS CODE
NONRESIDENTIAL MANDATORY MEASURES, SHEET 1 (July 2021, Includes July 2021 Supplement)

Y = YES
N/A = NOT APPLICABLE
RESPON. PARTY = RESPONSIBLE PARTY (ie: ARCHITECT, ENGINEER, OWNER, CONTRACTOR, INSPECTOR ETC.)

5.303.3.4 Faucets and fountains.

5.303.3.4.1 Nonresidential Lavatory faucets. Lavatory faucets shall have a maximum flow rate of not more than 0.5 gallons per minute at 60 psi.

5.303.3.4.2 Kitchen faucets. Kitchen faucets shall have a maximum flow rate of not more than 1.8 gallons per minute at 60 psi. Kitchen faucets may temporarily increase the flow above the maximum rate, but not to exceed 2.2 gallons per minute at 60 psi, and must default to a maximum flow rate of 1.8 gallons per minute at 60 psi.

5.303.3.4.3 Wash fountains. Wash fountains shall have a maximum flow rate of not more than1.8 gallons per minute/20 [rim space (inches) at 60 psi].

5.303.3.4.4 Metering faucets. Metering faucets shall not deliver more than 0.20 gallons per cycle.

5.303.3.4.5 Metering faucets for wash fountains. Metering faucets for wash fountains shall have a maximum flow rate of not more than 0.20 gallons per minute/20 [rim space (inches) at 60 psi].

Note: Where complying faucets are unavailable, aerators or other means may be used to achieve reduction.

5.303.3.4.6 Pre-rinse spray value
When installed, shall meet the requirements in the *California Code of Regulations*, Title 20 (Appliance Efficiency Regulations), Section 1605.1 (h)(4) Table H-2, Section 1605.3 (h)(4)(A), and Section 1607 (d)(7), and shall be equipped with an integral automatic shutoff.

FOR REFERENCE ONLY: The following table and code section have been reprinted from the *California Code of Regulations*, Title 20 (Appliance Efficiency Regulations), Section 1605.1 (h)(4) and Section 1605.3 (h)(4)(A).

TABLE H-2

STANDARDS FOR COMMERCIAL PRE-RINSE SPRAY VALUES MANUFACTURED ON OR AFTER JANUARY 28, 2019

PRODUCT CLASS [spray force in ounce force (ozf)]	MAXIMUM FLOW RATE (gpm)
Product Class 1 (≤ 5.0 ozf)	1.00
Product Class 2 (> 5.0 ozf and ≤ 8.0 ozf)	1.20
Product Class 3 (> 8.0 ozf)	1.28

☐ ■ **5.303.4 COMMERCIAL KITCHEN EQUIPMENT.**

5.303.4.1 Food Waste Disposers. Disposers shall either modulate the use of water to no more than 1 gpm when the disposer is not in use (not actively grinding food waste/no-load) or shall automatically shut off after no more than 10 minutes of inactivity. Disposers shall use no more than 8 gpm of water.
Note: This code section does not affect local jurisdiction authority to prohibit or require disposer installation.

☐ ■ **5.303.5 AREAS OF ADDITION OR ALTERATION.** For those occupancies within the authority of the California Building Standards Commission as specified in Section 103, the provisions of Section 5.303.3 and 5.303.4 shall apply to new fixtures in additions or areas of alteration to the building.

■ ☐ PBK **5.303.6 STANDARDS FOR PLUMBING FIXTURES AND FITTINGS.** Plumbing fixtures and fittings shall be installed in accordance with the *California Plumbing Code*, and shall meet the applicable standards referenced in Table 1701.1 of the *California Plumbing Code* and in Chapter 6 of this code.

☐ ■ **SECTION 5.304 OUTDOOR WATER USE**
5.304.1 OUTDOOR POTABLE WATER USE IN LANDSCAPE AREAS. Nonresidential developments shall comply with a local water efficient landscape ordinance or the current California Department of Water Resources' Model Water Efficient Landscape Ordinance (MWELO), whichever is more stringent.

Notes:
1. The Model Water Efficient Landscape Ordinance (MWELO) is located in the California Code of Regulations, Title 23, Chapter 2.7, Division 2.
2. MWELO and supporting documents, including a water budget calculator, are available at: https://www.water.ca.gov/.

☐ ☐ **5.304.6 OUTDOOR POTABLE WATER USE IN LANDSCAPE AREAS.** For public schools and community colleges, landscape projects as described in Sections 5.304.6.1 and 5.304.6.2 shall comply with the California Department of Water Resources Model Water Efficient Landscape Ordinance (MWELO) commencing with Section 490 of Chapter 2.7, Division 2, Title 23, *California Code of Regulations*, except that the evapotranspiration adjustment factor (ETAF) shall be 0.65 with an additional water allowance for special landscape areas (SLA) of 0.35.

Exception: Any project with an aggregate landscape area of 2,500 square feet or less may comply with the prescriptive measures contained in Appendix D of the MWELO.

5.304.6.1 Newly constructed landscapes. New construction projects with an aggregate landscape area equal to or greater than 500 square feet.

5.304.6.2 Rehabilitated landscapes. Rehabilitated landscape projects with an aggregate landscape area equal to or greater than 1,200 square feet.

DIVISION 5.4 MATERIAL CONSERVATION AND RESOURCE EFFICIENCY

SECTION 5.401 GENERAL
5.401.1 SCOPE. The provisions of this chapter shall outline means of achieving material conservation and resource efficiency through protection of buildings from exterior moisture, construction waste diversion, employment of techniques to reduce pollution through recycling of materials, and building commissioning or testing and adjusting.

SECTION 5.402 DEFINITIONS
5.402.1 DEFINITIONS. The following terms are defined in Chapter 2 *(and are included here for reference)*

ADJUST. To regulate fluid flow rate and air patterns at the terminal equipment, such as to reduce fan speed or adjust a damper.

BALANCE. To proportion flows within the distribution system, including sub-mains, branches and terminals, according to design quantities.

BUILDING COMMISSIONING. A systematic quality assurance process that spans the entire design and construction process, including verifying and documenting that building systems and components are planned, designed, installed, tested, operated and maintained to meet the owner's project requirements.

ORGANIC WASTE. Food waste, green waste, landscape and pruning wste, nonhazardous wood waste, and food soiled paper waste that is mixed in with food waste.

TEST. A procedure to determine quantitative performance of a system or equipment

SECTION 5.407 WATER RESISTANCE AND MOISTURE MANAGEMENT
5.407.1 WEATHER PROTECTION. Provide a weather-resistant exterior wall and foundation envelope as required by California Building Code Section 1402.2 (Weather Protection), manufacturer's installation instructions or local ordinance, whichever is more stringent.

☐ ■ **5.407.2 MOISTURE CONTROL.** Employ moisture control measures by the following methods.

5.407.2.1 Sprinklers. Design and maintain landscape irrigation systems to prevent spray on structures.

5.407.2.2 Entries and openings. Design exterior entries and/or openings subject to foot traffic or wind-driven rain to prevent water intrusion into buildings as follows:

5.407.2.2.1 Exterior door protection. Primary exterior entries shall be covered to prevent water intrusion by using nonabsorbent floor and wall finishes within at least 2 feet around and perpendicular to such openings plus at least one of the following:

1. An installed awning at least 4 feet in depth.
2. The door is protected by a roof overhang at least 4 feet in depth.
3. The door is recessed at least 4 feet.
4. Other methods which provide equivalent protection.

5.407.2.2.2 Flashing. Install flashings integrated with a drainage plane.

SECTION 5.408 CONSTRUCTION WASTE REDUCTION, DISPOSAL AND RECYCLING
■ ☐ PBK **5.408.1 CONSTRUCTION WASTE MANAGEMENT.** Recycle and/or salvage for reuse a minimum of 65% of the non-hazardous construction and demolition waste in accordance with Section 5.408.1.1, 5.408.1.2 or 5.408.1.3; or meet a local construction and demolition waste management ordinance, whichever is more stringent.

5.408.1.1 Construction waste management plan. Where a local jurisdiction does not have a construction and demolition waste management ordinance, submit a construction waste management plan that:

1. Identifies the construction and demolition waste materials to be diverted from disposal by efficient usage, recycling, reuse on the project or salvage for future use or sale.
2. Determines if construction and demolition waste materials will be sorted on-site (source-separated) or bulk mixed (single stream).
3. Identifies diversion facilities where construction and demolition waste material collected will be taken.
4. Specifies that the amount of construction and demolition waste materials diverted shall be calculated byweight or volume, but not by both.

5.408.1.2 Waste Management Company. Utilize a waste management company that can provide verifiable documentation that the percentage of construction and demolition waste material diverted from the landfill complies with this section.

Note: The owner or contractor shall make the determination if the construction and demolition waste material will be diverted by a waste management company.

Exceptions to Sections 5.408.1.1 and 5.408.1.2:

1. Excavated soil and land-clearing debris.
2. Alternate waste reduction methods developed by working with local agencies if diversion or recycle facilities capable of compliance with this item do not exist.
3. Demolition waste meeting local ordinance or calculated in consideration of local recycling facilities and markets.

5.408.1.3 Waste stream reduction alternative. The combined weight of new construction disposal that does not exceed two pounds per square foot of building area may be deemed to meet the 65% minimum requirement as approved by the enforcing agency.

5.408.1.4 Documentation. Documentation shall be provided to the enforcing agency which demonstrates compliance with Sections 5.408.1.1, through 5.408.1.3. The waste management plan shall be updated as necessary and shall be accessible during construction for examination by the enforcing agency.

Notes:

1. Sample forms found in "A Guide to the California Green Building Standards Code (Nonresidential)" located www.dgs.ca.gov/BSC/Resources/Page-Content/Building-Standards-Commission-Resources-List-Folder/CALGreen may be used to assist in documenting compliance with the waste management plan.
2. Mixed construction and demolition debris processors can be located at the California Department of Resources Recycling and Recovery (CalRecycle).

■ ☐ PBK **5.408.2 UNIVERSAL WASTE. [A]** Additions and alterations to a building or tenant space that meet the scoping provisions in Section 301.3 for nonresidential additions and alterations, shall require verification that Universal Waste items such as fluorescent lamps and ballast and mercury containing thermostats as well as other California prohibited Universal Waste materials are disposed of properly and are diverted from landfills. A list of prohibited Universal Waste materials shall be included in the construction documents.

Note: Refer to the Universal Waste Rule link at: http://www.dtsc.ca.gov/universalwaste/

■ ☐ PBK **5.408.3 EXCAVATED SOIL AND LAND CLEARING DEBRIS.** 100 percent of trees, stumps, rocks and associated vegetation and soils resulting primarily from land clearing shall be reused or recycled. For a phased project, such material may be stockpiled on site until the storage site is developed.

Exception: Reuse, either on or off-site, of vegetation or soil contaminated by disease or pest infestation.

Notes:

1. If contamination by disease or pest infestation is suspected, contact the County Agricultural Commissioner and follow its direction for recycling or disposal of the material.
2. For a map of know pest and/or disease quarantine zones, consult with the California Department of Food and Agriculture. (www.cdfa.ca.gov)

■ ☐ PBK **SECTION 5.410 BUILDING MAINTENANCE AND OPERATIONS**
5.410.1 RECYCLING BY OCCUPANTS. Provide readily accessible areas that serve the entire building and are identified for the depositing, storage and collection of non-hazardous materials for recycling, including (at a minimum) paper, corrugated cardboard, glass, plastics, organic waste, and metals or meet a lawfully enacted local recycling ordinance, if more restrictive.

Exception: Rural jurisdictions that meet and apply for the exemption in Public Resources Code 42649.82 (a)(2)(A) et seq. shall also be exempt from the organic waste portion of this section.

5.410.1.1 Additions. All additions conducted within a 12-month period under single or multiple permits, resulting in an increase of 30% or more in floor area, shall provide recycling areas on site.

Exception: Additions within a tenant space resulting in less than a 30% increase in the tenant space floor area.

5.410.1.2 Sample ordinance. Space allocation for recycling areas shall comply with Chapter 18, Part 3, Division 30 of the *Public Resources Code*. Chapter 18 is known as the California Solid Waste Reuse and Recycling Access Act of 1991 (Act).

Note: A sample ordinance for use by local agencies may be found in Appendix A of the document at the CalRecycle's web site.

☐ ■ **5.410.2 COMMISSIONING. [N] New buildings 10,000 square feet and over.** For new buildings 10,000 square feet and over, building commissioning shall be included in the design and construction processes of the building project to verify that the building systems and components meet the owner's or owner representative's project requirements. Commissioning shall be performed in accordance with this section by trained personnel with experience on projects of comparable size and complexity. For I-occupancies that are not regulated by OSHPD or for I-occupancies and L-occupancies that are not regulated y the California Energy Code Section 100.0 Scope, all requirements in Sections 5.410.2 through 5.410.2.6 shall apply.

Note: For energy-related systems under the scope (Section 100) of the California Energy Code, including heating, ventilation, air conditioning (HVAC) systems and controls, indoor lighting systems and controls, as well as water heating systems and controls, refer to California Energy Code Section 120.8 for commissioning requirements

Commissioning requirements shall include:

1. Owner's or Owner representative's project requirements.
2. Basis of design.
3. Commissioning measures shown in the construction documents.
4. Commissioning plan.
5. Functional performance testing.
6. Documentation and training.
7. Commissioning report.

Exceptions:

1. Unconditioned warehouses of any size.
2. Areas less than 10,000 square feet used for offices or other conditioned accessory spaces within unconditioned warehouses.
3. Tenant improvements less than 10,000 square feet as described in Section 303.1.1.
4. Open parking garages of any size, or open parking garage areas, of any size, within a structure.

Note: For the purposes of this section, unconditioned shall mean a building, area, or room which does not provide heating and or air conditioning.

Informational Notes:

1. IAS AC 476 is an accreditation criteria for organizations providing training and/or certification of commissioning personnel. AC 476 is available to the Authority Having Jurisdiction as a reference for qualifications of commissioning personnel. AC 476 des not certify individuals to conduct functional performance tests or to adjust and balance systems.

2. Functional performance testing for heating, ventilation, air conditioning systems and lighting controls must be performed in compliance with the *California Energy Code*.

5.410.2.1 Owner's or Owner Representative's Project Requirements (OPR). [N] The expectations and requirements of the building appropriate to its phase shall be documented before the design phase of the project begins. This documentation shall include the following:
1. Environmental and sustainability goals.
2. Building sustainable goals.
3. Indoor environmental quality requirements.
4. Project program, including facility functions and hours of operation, and need for after hours operation.
5. Equipment and systems expectations.
6. Building occupant and operation and maintenance (O&M) personnel expectations.

5.410.2.2 Basis of Design (BOD). [N] A written explanation of how the design of the building systems meets the OPR shall be completed at the design phase of the building project. The Basis of Design document shall cover the following systems:

1. Renewable energy systems.
2. Landscape irrigation systems.
3. Water reuse system.

5.410.2.3 Commissioning plan. [N] Prior to permit issuance a commissioning plan shall be completed to document how the project will be commissioned. The commissioning plan shall include the following:
1. General project information.
2. Commissioning goals.
3. Systems to be commissioned. Plans to test systems and components shall include:
   a. An explanation of the original design intent.
   b. Equipment and systems to be tested, including the extent of tests.
   c. Functions to be tested.
   d. Conditions under which the test shall be performed.
   e. Measurable criteria for acceptable performance.
4. Commissioning team information.
5. Commissioning process activities, schedules and responsibilities. Plans for the completion of commissioning shall be included.

5.410.2.4 Functional performance testing. [N] Functional performance tests shall demonstrate the correct installation and operation of each component, system and system-to-system interface in accordance with the approved plans and specifications. Functional performance testing reports shall contain information addressing each of the building components tested, the testing methods utilized, and include any readings and adjustments made.

5.410.2.5 Documentation and training. [N] A Systems Manual and Systems Operations Training are required, including Occupational Safety and Health Act (OSHA) requirements in *California Code of Regulations* (CCR), Title 8, Section 5142, and other related regulations.

5.410.2.5.1 Systems manual. [N] Documentation of the operational aspects of the building shall be completed within the systems manual and delivered to the building owner or representative. The systems manual shall include the following:
1. Site information, including facility description, history and current requirements.
2. Site contact information.
3. Basic operations and maintenance, including general site operating procedures, basic troubleshooting, recommended maintenance requirements, site events log.
4. Major systems.
5. Site equipment inventory and maintenance notes.
6. A copy of verifications required by the enforcing agency or this code.
7. Other resources and documentation, if applicable.

5.410.2.5.2 Systems operations training. [N] A program for training of the appropriate maintenance staff for each equipment type and/or system shall be developed and documented in the commissioning report and shall include the following:
1. System/equipment overview (what it is, what it does and with what other systems and/or equipment it interfaces).
2. Review and demonstration of servicing/preventive maintenance.
3. Review of the information in the Systems Manual.
4. Review of the record drawings on the system/equipment.

5.410.2.6 Commissioning report. [N] A report of commissioning process activities undertaken through the design and construction phases of the building project shall be completed and provided to the owner or representative.

☐ ■ **5.410.4 TESTING AND ADJUSTING. New buildings less than 10,000 square feet.** Testing and adjusting of systems shall be required for new buildings less than 10,000 square feet or new systems to serve an addition or alteration subject to Section 303.1.

5.410.4.2 (Reserved)

Note: For energy-related systems under the scope (Section 100) of the California Energy Code, including heating, ventilation, air conditioning (HVAC) systems and controls, indoor lighting system and controls, as well as water heating systems and controls, refer to California Energy Code Section 120.8 for commissioning requirements and Sections 120.5, 120.6, 130.4, and 140.9(b)3 for additional testing requirements of specific systems.

5.410.4.2 Systems. Develop a written plan of procedures for testing and adjusting systems. Systems to be included for testing and adjusting shall include at a minimum, as applicable to the project:

1. Renewable energy systems.
2. Landscape irrigation systems.
3. Water reuse systems.

5.410.4.3 Procedures. Perform testing and adjusting procedures in accordance with manufacturer's specifications and applicable standards on each system.

5.410.4.3.1 HVAC balancing. In addition to testing and adjusting, before a new space-conditioning system serving a building or space is operated for normal use, the system shall be balanced in accordance with the procedures defined by the Testing Adjusting and Balancing Bureau National Standards; the National Environmental Balancing Bureau Procedural Standards; Associated Air Balance Council National Standards or as approved by the enforcing agency.

5.410.4.4 Reporting. After completion of testing, adjusting and balancing, provide a final report of testing signed by the individual responsible for performing these services.

5.410.4.5 Operation and maintenance (O & M) manual. Provide the building owner or representative with detailed operating and maintenance instructions and copies of guaranties/warranties for each system. O & M instructions shall be consistent with OSHA requirements in CCR, Title 8, Section 5142, and other related regulations.

5.410.4.5.1 Inspections and reports. Include a copy of all inspection verifications and reports required by the enforcing agency.

DIVISION 5.5 ENVIRONMENTAL QUALITY

SECTION 5.501 GENERAL
5.501.1 SCOPE. The provisions of this chapter shall outline means of reducing the quantity of air contaminants that are odorous, irritating, and/or harmful to the comfort and well-being of a building's installers, occupants and neighbors.

SECTION 5.502 DEFINITIONS
5.502.1 DEFINITIONS. The following terms are defined in Chapter 2 *(and are included here for reference)*

ARTERIAL HIGHWAY. A general term denoting a highway primarily for through traffic usually on a continuous route.

A-WEIGHTED SOUND LEVEL (dBA). The sound pressure level in decibels as measured on a sound level meter using the internationally standardized A-weighting filter or as computed from sound spectral data to which A-weighting adjustments have been made.

1 BTU/HOUR. British thermal units per hour, also referred to as Btu. The amount of heat required to raise one pound of water one degree Fahrenheit per hour, a common measure of heat transfer rate. A ton of refrigeration is 12,000 Btu, the amount of heat required to melt a ton (2,000 pounds) of ice at 32^{0} Fahrenheit.

COMMUNITY NOISE EQUIVALENT LEVEL (CNEL). A metric similar to the day-night average sound level (Ldn), except that a 5 decibel adjustment is added to the equivalent continuous sound exposure level for evening hours (7pm to 10pm) in addition to the 10 dB nighttime adjustment used in the Ldn.

COMPOSITE WOOD PRODUCTS. Composite wood products include hardwood plywood, particleboard and medium density fiberboard. "Composite wood products" does not include hardboard, structural plywood, structural panels, structural composite lumber, oriented strand board, glued laminated timber, timber, prefabricated wood I–joists or finger–jointed lumber, all as specified in California Code of Regulations (CCR), Title 17, Section 93120.1(a).

Note: See CCR, Title 17, Section 93120.1.

DAY-NIGHT AVERAGE SOUND LEVEL (Ldn). The A-weighted equivalent continuous sound exposure level for a 24-hour period with a 10 dB adjustment added to sound levels occurring during nighttime hours (10p.m. to 7 a.m.).

DECIBEL (db). A measure on a logarithmic scale of the magnitude of a particular quantity (such as sound pressure, sound power, sound intensity) with respect to a reference quantity.

ELECTRIC VEHICLE (EV). An automotive-type vehicle for on-road use, such as passenger automobiles, buses, trucks, vans, neighborhood electric vehicles, electric motorcycles, and the like, primarily powered by an electric motor that draws current from a rechargeable storage battery, fuel cell, photovoltaic array, or other source of electric current. Plug-in hybrid electric vehicles (PHEV) are considered electric vehicles. For purposes of the *California Electrical Code*, off-road, self-propoelled electric vehicles, such as industrial trucks, hoists, lifts, transports, golf carts, airline ground support equipment, tractors, boats, and the like, are not included.

ELECTRIC VEHICLE CHARGING STATION(S) (EVCS)). One or more spaces intended for charging electric vehicles.

ELECTRIC VEHICLE SUPPLY EQUIPMENT (EVSE). The conductors, including the ungrounded, grounded, and equipment grounding conductors and the electric vehicle connectors, attachment plugs, and all other fittings, devices, power outlets, or apparatus installed specifically for the purpose of transferring energy between the premises wiring and the electric vehicle.

ENERGY EQUIVALENT (NOISE) LEVEL (Leq). The level of a steady noise which would have the same energy as the fluctuating noise level integrated over the time of period of interest.

EXPRESSWAY. An arterial highway for through traffic which may have partial control of access, but which may or may not be divided or have grade separations at intersections.

FREEWAY. A divided arterial highway with full control of access and with grade separations at intersections.

GLOBAL WARMING POTENTIAL (GWP). The radiative forcing impact of one mass-based unit of a given greenhouse gas relative to an equivalent unit of carbon dioxide over a given period of time. Carbon dioxide is the reference compound with a GWP of one.

GLOBAL WARMING POTENTIAL VALUE (GWP VALUE). A 100-year GWP value published by the Intergovernmental Panel on Climate Change (IPCC) in either its Second Assessment Report (SAR) (IPCC, 1995); or its Fourth Assessment A-3 Report (AR4) (IPCC, 2007). The SAR GWP values are found in column "SAR (100-yr)" of Table 2.14.; the AR4 GWP values are found in column "100 yr" of Table 2.14.

HIGH-GWP REFRIGERANT. A compound used as a heat transfer fluid or gas that is: (a) a chlorofluorocarbon, a hdrochlorofluorocarbon, a hydrofluorocarbon, a perfluorocarbon, or any compound or blend of compounds, with a GWP value equal to or greater than 150, or (B) any ozone depleting substance as defined in Title 40 of the Code of Federal Regulations, Part 82, sec.82.3 (as amended March 10, 2009).

LONG RADIUS ELBOW. Pipe fitting installed between two lengths of pipe or tubing to allow a change of direction, with a radius 1.5 times the pipe diameter.

LOW-GWP REFRIGERANT. A compound used as a heat transfer fluid or gas that: (A) has a GWP value less than 150, and (B) is not an ozone depleting substance as defined in Title 40 of the Code of Federal Regulations, Part 82, sec.82.3 (as amended March 10, 2009).

MERV. Filter minimum efficiency reporting value, based on ASHRAE 52.2–1999.

MAXIMUM INCREMENTAL REACTIVITY (MIR). The maximum change in weight of ozone formed by adding a compound to the "Base REactive Organic Gas (ROG) Mixture" per weight of compound added, expressed to hundreths of a gram (g O^{3}/g ROC).

PRODUCT-WEIGHTED MIR (PWMIR). The sum of all weighted-MIR for all ingredients in a product subject to this article. The PWMIR is the total product reactivity expressed to hundredths of a gram of ozone formed per gram of product (excluding container and packaging).

PSIG. Pounds per square inch, guage.

REACTIVE ORGANIC COMPOUND (ROC). Any compound that has the potential, once emitted, to contribute to ozone formation in the troposphere.

SCHRADER ACCESS VALVES. Access fittings with a valve core installed.

SHORT RADIUS ELBOW. Pipe fitting installed between two lengths of pipe or tubing to allow a change of direction, with a radius 1.0 times the pipe diameter.

SUPERMARKET. For the purposes of Section 5.508.2, a supermarket is any retail food facility with 8,000 square feet or more conditioned area, and that utilizes either refrigerated display cases, or walk-in coolers or freezers connected to remote compressor units or condensing units.

VOC. A volatile organic compound broadly defined as a chemical compound based on carbon chains or rings with vapor pressure greater than 0.1 millimeters of mercury at room temperature. These compounds typically contain hydrogen and may contain oxygen, nitrogen and other elements. See CCR Title 17, Section 94508(a)

Note: Where specific regulations are cited from different agencies such as SCAQMD, ARB, etc., the VOC definition included in that specific regulation is the one that prevails for the specific measure in question.

☐ ■ **SECTION 5.503 FIREPLACES**
5.503.1 FIREPLACES. Install only a direct-vent sealed-combustion gas or sealed wood-burning fireplace, or a sealed woodstove or pellet stove, and refer to residential requirements in the California Energy Code, Title 24, Part 6, Subchapter 7, Section 150. Woodstoves, pellet stoves and fireplaces shall comply with applicable local ordinances.

5.503.1.1 Woodstoves. Woodstoves and pellet stoves shall comply with U.S. EPA New Source Performance Standards (NSPS) emission limits as applicable, and shall have a permanent label indicating they are certified to meet the emission limits.

☐ ■ **SECTION 5.504 POLLUTANT CONTROL**
5.504.1 TEMPORARY VENTILATION. The permanent HVAC system shall only be used during construction if necessary to condition the building or areas of addition or alteration within the required temperature range for material and equipment installation. If the HVAC system is used during construction, use return air filters with a Minimum Efficiency Reporting Value (MERV) of 8, based on ASHRAE 52.2-1999, or an average efficiency of 30% based on ASHRAE 52.1-1992 Replace all filters immediately prior to occupancy, or, if the building is occupied during alteration, at the conclusion of construction.

☐ ■ **5.504.3 Covering of duct openings and protection of mechanical equipment during construction.** At the time of rough installation and during storage on the construction site until final startup of the heating, cooling and ventilation equipment, all duct and other related air distribution component openings shall be covered with tape, plastic, sheetmetal or other methods acceptable to the enforcing agency to reduce the amount of dust, water and debris which may enter the system.

GBS-02

DISCLAIMER: *THIS DOCUMENT IS PROVIDED AND INTENDED TO BE USED AS A MEANS TO INDICATE AREAS OF COMPLIANCE WITH THE CALIFORNIA GREEN BUILDING STANDARDS (CALGREEN) CODE. DUE TO THE VARIABLES BETWEEN BUILDING DEPARTMENT JURISDICTIONS, THIS CHECKLIST IS TO BE USED ON AN INDIVIDUAL PROJECT BASIS AND MAY BE MODIFIED BY THE END USER TO MEET THOSE INDIVIDUAL NEEDS. THE END USER ASSUMES ALL RESPONSIBILITY ASSOCIATED WITH THE USE OF THIS DOCUMENT, INCLUDING VERIFICATION WITH THE FULL CODE.*

2019 CALIFORNIA GREEN BUILDING STANDARDS CODE
NONRESIDENTIAL MANDATORY MEASURES, SHEET 1 (July 2021, Includes July 2021 Supplement)

Y = YES
N/A = NOT APPLICABLE
RESPON. PARTY = RESPONSIBLE PARTY (ie: ARCHITECT, ENGINEER, OWNER, CONTRACTOR, INSPECTOR ETC.)

Y	N/A	RESPON. PARTY
■	□	PBK

5.504.4 FINISH MATERIAL POLLUTANT CONTROL. Finish materials shall comply with Sections 5.504.4.1 through 5.504.4.6.

5.504.4.1 Adhesives, sealants and caulks. Adhesives, sealants, and caulks used on the project shall meet the requirements of the following standards:

1. Adhesives, adhesive bonding primers, adhesive primers, sealants, sealant primers and caulks shall comply with local or regional air pollution control or air quality management district rules where applicable, or SCAQMD Rule 1168 VOC limits, as shown in Tables 5.504.4.1 and 5.504.4.2. Such products also shall comply with the Rule 1168 prohibition on the use of certain toxic compounds (chloroform, ethylene dichloride, methylene chloride, perchloroethylene and trichloroethylene), except for aerosol products as specified in subsection 2, below.

2. Aerosol adhesives, and smaller unit sizes of adhesives, and sealant or caulking compounds (in units of product, less packaging, which do not weigh more than one pound and do not consist of more than 16 fluid ounces) shall comply with statewide VOC standards and other requirements, including prohibitions on use of certain toxic compounds, of *California Code of Regulations*, Title 17, commencing with Section 94507.

TABLE 5.504.4.1 - ADHESIVE VOC LIMIT[1,2]

Less Water and Less Exempt Compounds in Grams per Liter

ARCHITECTURAL APPLICATIONS	CURRENT VOC LIMIT
INDOOR CARPET ADHESIVES	50
CARPET PAD ADHESIVES	50
OUTDOOR CARPET ADHESIVES	150
WOOD FLOORING ADHESIVES	100
RUBBER FLOOR ADHESIVES	60
SUBFLOOR ADHESIVES	50
CERAMIC TILE ADHESIVES	65
VCT & ASPHALT TILE ADHESIVES	50
DRYWALL & PANEL ADHESIVES	50
COVE BASE ADHESIVES	50
MULTIPURPOSE CONSTRUCTION ADHESIVES	70
STRUCTURAL GLAZING ADHESIVES	100
SINGLE-PLY ROOF MEMBRANE ADHESIVES	250
OTHER ADHESIVES NOT SPECIFICALLY LISTED	50
SPECIALTY APPLICATIONS	
PVC WELDING	510
CPVC WELDING	490
ABS WELDING	325
PLASTIC CEMENT WELDING	250
ADHESIVE PRIMER FOR PLASTIC	550
CONTACT ADHESIVE	80
SPECIAL PURPOSE CONTACT ADHESIVE	250
STRUCTURAL WOOD MEMBER ADHESIVE	140
TOP & TRIM ADHESIVE	250
SUBSTRATE SPECIFIC APPLICATIONS	
METAL TO METAL	30
PLASTIC FOAMS	50
POROUS MATERIAL (EXCEPT WOOD)	50
WOOD	30
FIBERGLASS	80

1. IF AN ADHESIVE IS USED TO BOND DISSIMILAR SUBSTRATES TOGETHER, THE ADHESIVE WITH THE HIGHEST VOC CONTENT SHALL BE ALLOWED.

2. FOR ADDITIONAL INFORMATION REGARDING METHODS TO MEASURE THE VOC CONTENT SPECIFIED IN THIS TABLE, SEE SOUTH COAST AIR QUALITY MANAGEMENT DISTRICT RULE 1168, www.arb.ca.gov/DRDB/SC/CURHTML/R1168.PDF

TABLE 5.504.4.2 - SEALANT VOC LIMIT

Less Water and Less Exempt Compounds in Grams per Liter

SEALANTS	CURRENT VOC LIMIT
ARCHITECTURAL	250
MARINE DECK	760
NONMEMBRANE ROOF	300
ROADWAY	250
SINGLE-PLY ROOF MEMBRANE	450
OTHER	420
SEALANT PRIMERS	
ARCHITECTURAL	
NONPOROUS	250
POROUS	775
MODIFIED BITUMINOUS	500
MARINE DECK	760
OTHER	750

NOTE: FOR ADDITIONAL INFORMATION REGARDING METHODS TO MEASURE THE VOC CONTENT SPECIFIED IN THESE TABLES, SEE SOUTH COAST AIR QUALITY MANAGEMENT DISTRICT RULE 1168.

5.504.4.3 Paints and coatings. Architectural paints and coatings shall comply with VOC limits in Table 1 of the ARB Architectural Coatings Suggested Control Measure, as shown in Table 5.504.4.3, unless more stringent local limits apply. The VOC content limit for coatings that do not meet the definitions for the specialty coatings categories listed in Table 5.504.4.3 shall be determined by classifying the coating as a Flat, Nonflat or Nonflat-High Gloss coating, based on its gloss, as defined in Subsections 4.21, 4.36 and 4.37 of the 2007 California Air Resources Board Suggested Control Measure, and the corresponding Flat, Nonflat or Nonflat-High Gloss VOC limit in Table 5.504.4.3 shall apply.

5.504.4.3.1 Aerosol Paints and coatings. Aerosol paints and coatings shall meet the PWMIR Limits for ROC in Section 94522(a)(3) and other requirements, including prohibitions on use of certain toxic compounds and ozone depleting substances, in Sections 94522(c)(2) and (d)(2) of *California Code of Regulations,* Title 17, commencing with Section 94520; and in areas under the jurisdiction of the Bay Area Air Quality Management District additionally comply with the percent VOC by weight of product limits of Regulation 8 Rule 49.

Y	N/A	RESPON. PARTY

TABLE 5.504.4.3 - VOC CONTENT LIMITS FOR ARCHITECTURAL COATINGS[2,3]

GRAMS OF VOC PER LITER OF COATING, LESS WATER & LESS EXEMPT COMPOUNDS

COATING CATEGORY	CURRENT VOC LIMIT
FLAT COATINGS	50
NONFLAT COATINGS	100
NONFLAT HIGH GLOSS COATINGS	150
SPECIALTY COATINGS	
ALUMINUM ROOF COATINGS	400
BASEMENT SPECIALTY COATINGS	400
BITUMINOUS ROOF COATINGS	50
BITUMINOUS ROOF PRIMERS	350
BOND BREAKERS	350
CONCRETE CURING COMPOUNDS	350
CONCRETE/MASONRY SEALERS	100
DRIVEWAY SEALERS	50
DRY FOG COATINGS	150
FAUX FINISHING COATINGS	350
FIRE RESISTIVE COATINGS	350
FLOOR COATINGS	100
FORM-RELEASE COMPOUNDS	250
GRAPHIC ARTS COATINGS (SIGN PAINTS)	500
HIGH-TEMPERATURE COATINGS	420
INDUSTRIAL MAINTENANCE COATINGS	250
LOW SOLIDS COATINGS[1]	120
MAGNESITE CEMENT COATINGS	450
MASTIC TEXTURE COATINGS	100
METALLIC PIGMENTED COATINGS	500
MULTICOLOR COATINGS	250
PRETREATMENT WASH PRIMERS	420
PRIMERS, SEALERS, & UNDERCOATERS	100
REACTIVE PENETRATING SEALERS	350
RECYCLED COATINGS	250
ROOF COATINGS	50
RUST PREVENTATIVE COATINGS	250
SHELLACS:	
CLEAR	730
OPAQUE	550
SPECIALTY PRIMERS, SEALERS & UNDERCOATERS	100
STAINS	250
STONE CONSOLIDANTS	450
SWIMMING POOL COATINGS	340
TRAFFIC MARKING COATINGS	100
TUB & TILE REFINISH COATINGS	420
WATERPROOFING MEMBRANES	250
WOOD COATINGS	275
WOOD PRESERVATIVES	350
ZINC-RICH PRIMERS	340

1. GRAMS OF VOC PER LITER OF COATING, INCLUDING WATER & EXEMPT COMPOUNDS

2. THE SPECIFIED LIMITS REMAIN IN EFFECT UNLESS REVISED LIMITS ARE LISTED IN SUBSEQUENT COLUMNS IN THE TABLE.

3. VALUES IN THIS TABLE ARE DERIVED FROM THOSE SPECIFIED BY THE CALIFORNIA AIR RESOURCES BOARD, ARCHITECTURAL COATINGS SUGGESTED CONTROL MEASURE, FEB. 1, 2008. MORE INFORMATION IS AVAILABLE FROM THE AIR RESOURCES BOARD.

5.504.4.3.2 Verification. Verification of compliance with this section shall be provided at the request of the enforcing agency. Documentation may include, but is not limited to, the following:

1. Manufacturer's product specification
2. Field verification of on-site product containers

5.504.4.4 Carpet Systems.
All carpet installed in the building interior shall meet the requirements of the California Department of Public Health, "Standard Method for the Testing and Evaluation of Volatile Organic Chemical Emissions from Indoor Sources Using Environmental Chambers." Version 1.2, January 2017 (Emission testing method for California Specifications 01350).

See California Department of Public Health's website for certification programs and testing labs. https://www.cdph.ca.gov/Programs/CCDPHP/DEODC/EHLB/IAQ/Pages/VOC.aspx#material

5.504.4.4.1 Carpet cushion. All carpet cushion installed in the building interior shall meet the requirements of the California Department of Public Health,"Standard Method for the Testing and Evaluation of Volatile Organic Chemical Emissions from Indoor Sources Using Environmental Chambers,"Version 1.2, January 2017 (Emission testing method for California Specifications 01350).

See California Department of Public Health's website for certification programs and testing labs. https://www.cdph.ca.gov/Programs/CCDPHP/DEODC/EHLB/IAQ/Pages/VOC.aspx#material

5.504.4.4.2 Carpet adhesive. All carpet adhesive shall meet the requirements of Table 5.504.4.1.

5.504.4.5 Composite wood products. Hardwood plywood, particleboard and medium density fiberboard composite wood products used on the interior or exterior of the buildings shall meet the requirements for formaldehyde as specified in ARB's Air Toxics Control Measure (ATCM) for Composite Wood (17 CCR 93120 et seq.). Those materials not exempted under the ATCM must meet the specified emission limits, as shown in Table 5.504.4.5.

5.504.4.5.3 Documentation. Verification of compliance with this section shall be provided as requested by the enforcing agency. Documentation shall include at least one of the following:

1. Product certifications and specifications.
2. Chain of custody certifications.
3. Product labeled and invoiced as meeting the Composite Wood Products regulation (see CCR, Title 17, Section 93120, et seq.).
4. Exterior grade products marked as meeting the PS-1 or PS-2 standards of the Engineered Wood Association, the Australian AS/NZS 2269 or European 636 3S standards.
5. Other methods acceptable to the enforcing agency.

Y	N/A	RESPON. PARTY

TABLE 5.504.4.5 - FORMALDEHYDE LIMITS[1]

MAXIMUM FORMALDEHYDE EMISSIONS IN PARTS PER MILLION

PRODUCT	CURRENT LIMIT
HARDWOOD PLYWOOD VENEER CORE	0.05
HARDWOOD PLYWOOD COMPOSITE CORE	0.05
PARTICLE BOARD	0.09
MEDIUM DENSITY FIBERBOARD	0.11
THIN MEDIUM DENSITY FIBERBOARD[2]	0.13

1. VALUES IN THIS TABLE ARE DERIVED FROM THOSE SPECIFIED BY THE CALIFORNIA AIR RESOURCES BOARD, AIR TOXICS CONTROL MEASURE FOR COMPOSITE WOOD AS TESTED IN ACCORDANCE WITH ASTM E 1333. FOR ADDITIONAL INFORMATION, SEE CALIFORNIA CODE OF REGULATIONS, TITLE 17, SECTIONS 93120 THROUGH 93120.12.

2. THIN MEDIUM DENSITY FIBERBOARD HAS A MAXIMUM THICKNESS OF 5/16 INCHES (8 MM).

5.504.4.6 Resilient flooring systems. Where resilient flooring is installed, at least 80 percent of floor area receiving resilient flooring shall meet the requirements of the California Department of Public Health,"Standard Method for the Testing and Evaluation of Volatile Organic Chemical Emissions from Indoor Sources Using Environmental Chambers," Version 1.2, January 2017 (Emission testing method for California Specifications 01350)

See California Department of Public Health's website for certification programs and testing labs. https://www.cdph.ca.gov/Programs/CCDPHP/DEODC/EHLB/IAQ/Pages/VOC.aspx#material

5.504.4.6.1 Verification of compliance. Documentation shall be provided verifying that resilient flooring materials meet the pollutant emission limits.

5.504.5.3 Filters. In mechanically ventilated buildings, provide regularly occupied areas of the building with air filtration media for outside and return air that provides at least a Minimum Efficiency Reporting Value (MERV) of 13. MERV 13 filters shall be installed prior to occupancy, and recommendations for maintenance with filters of the same value shall be included in the operation and maintenance manual.

Exceptions: Existing mechanical equipment.

5.504.5.3.1 Labeling. Installed filters shall be clearly labeled by the manufacturer indicating the MERV rating.

Y	N/A	RESPON. PARTY
■	□	OWNER

5.504.7 ENVIRONMENTAL TOBACCO SMOKE (ETS) CONTROL. Where outdoor areas are provided for smoking, prohibit smoking within 25 feet of building entries, outdoor air intakes and operable windows and within the building as already prohibited by other laws or regulations; or as enforced by ordinances, regulations or policies of any city, county, city and county, California Community College, campus of the California State University, or campus of the University of California, whichever are more stringent. When ordinances, regulations or policies are not in place, post signage to inform building occupants of the prohibitions.

SECTION 5.505 INDOOR MOISTURE CONTROL

Y	N/A	RESPON. PARTY
■	□	PBK

5.505.1 INDOOR MOISTURE CONTROL. Buildings shall meet or exceed the provisions of California Building Code, CCR, Title 24, Part 2, Sections 1202 (Ventilation) and Chapter 14 (Exterior Walls). For additional measures, see Section 5.407.2 of this code.

SECTION 5.506 INDOOR AIR QUALITY

Y	N/A	RESPON. PARTY
■	□	PBK

5.506.1 OUTSIDE AIR DELIVERY. For mechanically or naturally ventilated spaces in buildings, meet the minimum requirements of Section 120.1 (Requirements For Ventilation) of the *California Energy Code*, or the applicable local code, whichever is more stringent, and Division 1, Chapter 4 of CCR, Title 8.

Y	N/A	RESPON. PARTY
□	■	

5.506.2 CARBON DIOXIDE (CO_2) MONITORING. For buildings or additions equipped with demand control ventilation, CO_2 sensors and ventilation controls shall be specified and installed in accordance with the requirements of the California Energy Code, Section 120(c)(4).

SECTION 5.507 ENVIRONMENTAL COMFORT

Y	N/A	RESPON. PARTY
■	□	PBK

5.507.4 ACOUSTICAL CONTROL. Employ building assemblies and components with Sound Transmission Class (STC) values determined in accordance with ASTM E 90 and ASTM E 413, or Outdoor-Indoor Sound Transmission Class (OITC) determined in accordance with ASTM E 1332, using either the prescriptive or performance method in Section 5.507.4.1 or 5.507.4.2.

Exception: Buildings with few or no occupants or where occupants are not likely to be affected by exterior noise, as determined by the enforcement authority, such as factories, stadiums, storage, enclosed parking structures and utility buildings.

Exception: [DSA-SS] For public schools and community colleges, the requirements of this section and all subsections apply only to new construction.

5.507.4.1 Exterior noise transmission, prescriptive method. Wall and roof-ceiling assemblies exposed to the noise source making up the building or addition envelope or altered envelope shall meet a composite STC rating of at least 50 or a composite OITC rating of no less than 40, with exterior windows of a minimum STC of 40 or OITC of 30 in the following locations:

1. Within the 65 CNEL noise contour of an airport.

Exceptions:

1. L_{dn} or CNEL for military airports shall be determined by the facility Air Installation Compatible Land Use Zone (AICUZ) plan.
2. L_{dn} or CNEL for other airports and heliports for which a land use plan has not been developed shall be determined by the local general plan noise element.

2. Within the 65 CNEL or L_{dn} noise contour of a freeway or expressway, railroad, industrial source or fixed-guideway source as determined by the Noise Element of the General Plan.

5.507.4.1.1. Noise exposure where noise contours are not readily available. Buildings exposed to a noise level of 65 dB L_{eq} - 1-hr during any hour of operation shall have building, addition or alteration exterior wall and roof-ceiling assemblies exposed to the noise source meeting a composite STC rating of at least 45 (or OITC 35), with exterior windows of a minimum STC of 40 (or OITC 30).

5.507.4.2 Performance Method. For buildings located as defined in Section 5.507.4.1 or 5.507.4.1.1, wall and roof-ceiling assemblies exposed to the noise source making up the building or addition envelope or altered envelope shall be constructed to provide an interior noise environment attributable to exterior sources that does not exceed an hourly equivalent noise level (Leq-1Hr) of 50 dBA in occupied areas during any hour of operation.

5.507.4.2.1 Site Features. Exterior features such as sound walls or earth berms may be utilized as appropriate to the building, addition or alteration project to mitigate sound migration to the interior.

5.507.4.2.2 Documentation of Compliance. An acoustical analysis documenting complying interior sound levels shall be prepared by personnel approved by the architect or engineer of record.

5.507.4.3 Interior sound transmission. Wall and floor-ceiling assemblies separating tenant spaces and tenant spaces and public places shall have an STC of at least 40.

Note: Examples of assemblies and their various STC ratings may be found at the California Office of Noise Control: www.toolbase.org/PDF/CaseStudies/stc_icc_ratings.pdf.

SECTION 5.508 OUTDOOR AIR QUALITY

Y	N/A	RESPON. PARTY
□	■	

5.508.1 Chlorofluorocarbons (CFCs). Install HVAC, refrigeration and fire suppression equipment that do not contain CFCs.

5.508.1.2 Halons. Install HVAC, refrigeration and fire suppression equipment that do not contain Halons.

Y	N/A	RESPON. PARTY
□	■	

5.508.2 Supermarket refrigerant leak reduction. New commercial refrigeration systems shall comply with the provisions of this section when installed in retail food stores 8,000 square feet or more conditioned area, and that utilize either refrigerated display cases, or walk-in coolers or freezers connected to remote compressor units or condensing units. The leak reduction measures apply to refrigeration systems containing high-global-warming potential (high-GWP) refrigerants with a GWP of 150 or greater. New refrigeration systems include both new facilities and the replacement of existing refrigeration systems in existing facilities.

Exception: Refrigeration systems containing low-global warming potential (low-GWP) refrigerant with a GWP value less than 150 are not subject to this section. Low-GWP refrigerants are nonozone-depleting refrigerants that include ammonia, carbon dioxide (CO_2), and potentially other refrigerants.

Y	N/A	RESPON. PARTY

5.508.2.1 Refrigerant piping. Piping compliant with the California Mechanical Code shall be installed to be accessible for leak protection and repairs. Piping runs using threaded pipe, copper tubing with an outside diameter (OD) less than 1/4 inch, flared tubing connections and short radius elbows shall not be used in refrigerant systems except as noted below.

5.508.2.1.1 Threaded pipe. Threaded connections are permitted at the compressor rack.

5.508.2.1.2 Copper pipe. Copper tubing with an OD less than 1/4 inch may be used in systems with a refrigerant charge of 5 pounds or less.

5.508.2.1.2.1 Anchorage. One-fouth-inch OD tubing shall be securely clamped to a rigid base to keep vibration levels below 8 mils.

5.508.2.1.3 Flared tubing connections. Double-flared tubing connections may be used for pressure controls, valve pilot lines and oil.

Exception: Single-flared tubing connections may be used with a multiring seal coated with industrial sealant suitable for use with refrigerants and tightened in accordance with manufacturer's recommendations.

5.508.2.1.4 Elbows. Short radius elbows are only permitted where space limitations prohibit use of long radius elbows.

5.508.2.2 Valves. Valves Valves and fittings shall comply with the *California Mechanical Code* and as follows.

5.508.2.2.1 Pressure relief valves. For vessels containing high-GWP refrigerant, a rupture disc shall be installed between the outlet of the vessel and the inlet of the pressure relief valve.

5.508.2.2.1.1 Pressure detection. A pressure gauge, pressure transducer or other device shall be installed in the space between the rupture disc and the relief valve inlet to indicate a disc rupture or discharge of the relief valve.

5.508.2.2.2 Access valves. Only Schrader access valves with a brass or steel body are permitted for use.

5.508.2.2.2.1 Valve caps. For systems with a refrigerant charge of 5 pounds or more, valve caps shall be brass or steel and not plastic.

5.508.2.2.2.2 Seal caps. If designed for it, the cap shall have a neoprene O-ring in place.

5.508.2.2.2.2.1 Chain tethers. Chain tethers to fit ovr the stem are required for valves designed to have seal caps.

Exception: Valves with seal caps that are not removed from the valve during stem operation.

5.508.2.3 Refrigerated service cases. Refrigerated service cases holding food products containing vinegar and salt shall have evaporator coils of corrosion-resistant material, such as stainless steel; or be coated to prevent corrosion from these substances.

5.508.2.3.1 Coil coating. Consideration shall be given to the heat transfer efficiency of coil coating to maximize energy efficiency.

5.508.2.4 Refrigerant receivers. Refrigerant receivers with capacities greater than 200 pounds shall be fitted with a device tha indicates the level of refrigerant in the receiver.

5.508.2.5 Pressure testing. The system shall be pressure tested during installation prior to evacuation and charging.

5.508.2.5.1 Minimum pressure. The system shall be charged with regulated dry nitrogen and appropriate tracer gas to bring system pressure up to 300 psig minimum.

5.508.2.5.2 Leaks. Check the system for leaks, repair any leaks, and retest for pressure using the same gauge.

5.508.2.5.3 Allowable pressure change. The system shall stand, unaltered, for 24 hours with no more than a +/- one pound pressure change from 300 psig, measured with the same gauge.

5.508.2.6 Evacuation. The system shall be evacuated after pressure testing and prior to charging.

5.508.2.6.1 First vacuum. Pull a system vacuum down to at least 1000 microns (+/- 50 microns), and hold for 30 minutes.

5.508.2.6.2 Second vacuum. Pull a second system vacuum to a minimum of 500 microns and hold for 30 minutes.

5.508.2.6.3 Third vacuum. Pull a third vacuum down to a minimum of 300 microns, and hold for 24 hours with a maximum drift of 100 microns over a 24-hour period.

CHAPTER 7
INSTALLER & SPECIAL INSPECTOR QUALIFICATIONS

702 QUALIFICATIONS

702.1 INSTALLER TRAINING. HVAC system installers shall be trained and certified in the proper installation of HVAC systems including ducts and equipment by a nationally or regionally recognized training or certification program. Uncertified persons may perform HVAC installations when under the direct supervision and responsibility of a person trained and certified to install HVAC systems or contractor licensed to install HVAC systems. Examples of acceptable HVAC training and certification programs include but are not limited to the following:

1. State certified apprenticeship programs.
2. Public utility training programs.
3. Training programs sponsored by trade, labor or statewide energy consulting or verification organizations.
4. Programs sponsored by manufacturing organizations.
5. Other programs acceptable to the enforcing agency.

702.2 SPECIAL INSPECTION [HCD]. When required by the enforcing agency, the owner or the responsible entity acting as the owner's agent shall employ one or more special inspectors to provide inspection or other duties necessary to substantiate compliance with this code. Special inspectors shall demonstrate competence to the satisfaction of the enforcing agency for the particular type of inspection or task to be performed. In addition to other certifications or qualifications acceptable to the enforcing agency, the following certifications or education may be considered by the enforcing agency when evaluating the qualifications of a special inspector:

1. Certification by a national or regional green building program or standard publisher.
2. Certification by a statewide energy consulting or verification organization, such as HERS raters, building performance contractors, and home energy auditors.
3. Successful completion of a third party apprentice training program in the appropriate trade.
4. Other programs acceptable to the enforcing agency.

Notes:

1. Special inspectors shall be independent entities with no financial interest in the materials or the project they are inspecting for compliance with this code.
2. HERS raters are special inspectors certified by the California Energy Commission (CEC) to rate homes in California according to the Home Energy Rating System (HERS).

[BSC-CG] When required by the enforcing agency, the owner or the responsible entity acting as the owner's agent shall employ one or more special inspectors to provide inspection or other duties necessary to substantiate compliance with this code. Special inspectors shall demonstrate competence to the satisfaction of the enforcing agency for the particular type of inspection or task to be performed. In addition, the special inspector shall have a certification from a recognized state, national or international association, as determined by the local agency. The area of certification shall be closely related to the primary job function, as determined by the local agency.

Note: Special inspectors shall be independent entities with no financial interest in the materials or the project they are inspecting for compliance with this code.

703 VERIFICATIONS

703.1 DOCUMENTATION. Documentation used to show compliance with this code shall include but is not limited to, construction documents, plans, specifications, builder or installer certification, inspection reports, or other methods acceptable to the enforcing agency which demonstrate substantial conformance. When specific documentation or special inspection is necessary to verify compliance, that method of compliance will be specified in the appropriate section or identified applicable checklist.

DISCLAIMER: *THIS DOCUMENT IS PROVIDED AND INTENDED TO BE USED AS A MEANS TO INDICATE AREAS OF COMPLIANCE WITH THE CALIFORNIA GREEN BUILDING STANDARDS (CALGREEN) CODE. DUE TO THE VARIABLES BETWEEN BUILDING DEPARTMENT JURISDICTIONS, THIS CHECKLIST IS TO BE USED ON AN INDIVIDUAL PROJECT BASIS AND MAY BE MODIFIED BY THE END USER TO MEET THOSE INDIVIDUAL NEEDS. THE END USER ASSUMES ALL RESPONSIBILITY ASSOCIATED WITH THE USE OF THIS DOCUMENT, INCLUDING VERIFICATION WITH THE FULL CODE.*